SIPOS AKTORIK

seven

Operation instructions

Assembly, operation and commissioning of 2SA7, 2SQ7 electric actuators

HiMod

PROFITRON

Introduction

These operation instructions contain concise information required for assembly, operation and commissioning. Extensive operation instructions for PROFITRON/HiMod are available on the Internet: www.sipos.de ► ► Product documents ► Instruction manuals.

Contents

1 General information ... 1
1.1 Safety information ... 1
1.2 Transport and storage ... 2
1.3 Disposal and recycling ... 2

EU Declaration of conformity ... 2

2 Assembly and connection ... 2
2.1 Mount to valve/gear ... 2
2.2 Separate mounting ... 4
2.3 Remote control unit ... 4
2.4 Electrical connection ... 4

3 Operation ... 5
3.1 Manual operation ... 5
3.2 Indications of the LEDs ... 6
3.3 Status indication ... 6
3.4 Display – position bar ... 6
3.5 Navigation through the menus ... 6

4 Commissioning ... 7
4.1 Notes on user management ... 7
4.2 Log on to actuator ... 7
4.3 End position adjustment ... 7
4.4 Mechanical position indicator ... 10

5 Maintenance, inspection, service ... 10
5.1 General safety information ... 10
5.2 Notes on inspection ... 10
5.3 Spare parts ... 10

6 Protection against unauthorized access ... 11

Should supplements be required for certain versions, applications, environmental conditions or software functions of the actuator, they will be included within the scope of delivery.

1 General information

1.1 Safety information

General information

The devices referred to in this document are components of installations conceived for industrial applications. They are designed in accordance with the recognized engineering rules.

All work involved in transport, assembly, installation, commissioning, maintenance and repair has to be performed by qualified personnel.

Qualified personnel within the meaning of the relevant safety instructions of this documentation are all persons authorized to perform the required tasks according to the standards of safety technology and who may recognize and avoid potential hazards. They must be thoroughly familiar with the warnings at the device and the safety instructions of these operation instructions.

- **Leakage currents**
  As standard, the leakage current of the actuators exceeds 3.5 mA. Therefore, fixed installation in accordance with IEC 61800-5-1 is required.
- **Residual current circuit breaker or monitoring devices**
  Due to the integral frequency converter, a direct current within the protective grounding conductor can be generated.
  Should a residual current-operated protective (RCD) or monitoring (RCM) device be used upstream the network, it must be of type B.

The distribution of this product is restricted according to IEC 61800-3.
and may cause radio interferences in domestic environments. In this case it may be necessary to take additional measures.

The following is of particular importance:

- The technical data and indications on permissible use (assembly, connection, environmental and service conditions).
- The general installation and safety guidelines as well as the local, plant-specific provisions and requirements.
- The proper use of tools and lifting and transport equipment.
- The use of personal protective equipment, especially in high ambient temperatures and with potential high actuator surface temperatures.

Prior to starting the assembly:

- Make sure that the intended measures (possible operation of the valve, etc.) are not likely to cause any injuries to persons or to interfere with the equipment.
- Heed the local ambient conditions, in particular the vibration load, which can be caused when mounting an actuator to a vibrating valve.

Warnings on the device

Danger of crushing. When pressing in the crank handle or the hand wheel ensure that neither the hand nor the fingers are crushed, refer to figure.

Applicable for devices of the 2SA7.5/6/7/8 series (size 4): Indicates which type of lubricant was used, refer to also to “Lubricant assignment and quantity” section in these operation instructions.

Hot surface. Risk of hot surface temperatures (caused by high ambient temperature and frequent operation as well as long activation times).

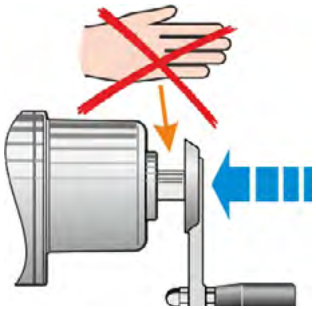

Fig.: Danger of crushing

1.2 Transport and storage

- The device must be supplied in sturdy packaging.
- For transport, loop the rope around the hand wheel housing, refer to illustration. Only use the eyes (1) on the electronics unit to lift the actuator's own weight, without neither additional gear nor valve.
- Do not attach the ropes and hooks at the crank handle or hand wheel for the purpose of lifting.
- Store in well-ventilated, dry room at -30 °C – +80 °C.
- Protection against damp floors: Either store actuator in a shelf or pallet.
- Keep connection hood/cover and cable glands as well as the cover of the electronics unit and position recording closed.

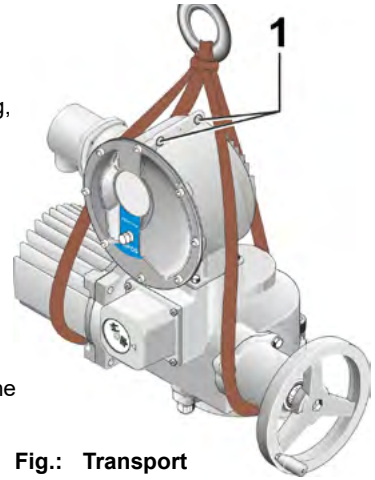

Fig.: Transport

1.3 Disposal and recycling

1.3.1 Packaging

The packaging of our products consists of environmentally friendly materials which can easily be separated and recycled. We use the following packaging materials: Wood-based panels (MSB/OSB), cardboard, paper, PE foil. For the disposal of the packaging material, we recommend recycling and collection centers.

1.3.2 Actuator

Our actuators have a modular design and may therefore be easily disassembled, separated and sorted according to materials, i.e.: electronic parts, different metals, plastics, greases and oils. The following generally applies:

- Collect greases and oils during disassembly. As a rule, these are substances hazardous to water and must not be released into the environment.
- Arrange for controlled waste disposal of the disassembled material or for separate recycling according to materials.
- Observe the national/local regulations for waste disposal.

EU Declaration of conformity

Explanation	Applied standards and directives
SIPOS Aktorik GmbH as manufacturer declares herewith that the 2SA7 and 2SQ7 actuators meet the basic requirements of the following Directives: - 2014/30/EU (EMC Directive) - 2006/42/EC (Machinery Directive) - 2014/35/EU (Low Voltage Directive) - 2011/65/EU (RoHS Directive) - 2014/53/EU (RED Directive)	The following harmonized standards in terms of the specified directives have been applied: Directive 2014/30/EU: EN 61800 -3: 2004 /A1: 2012 Directive 2006/42/EC: EN ISO 12100:2010, EN ISO 5210:1996; EN ISO 5211:2001, DIN 3358:1982 Directive 2014/35/EU: EN 61800-5-1:2007/A1:2017, EN 61800-1-11:2007/A1:2021 Directive 2011/65/EU: EN IEC 63000:2018 Directive 2014/53/EU: EN 300 328 V2.2.2, EN 301 489 V2.2.3, EN 301 489-17 V3.2.2

SIPOS actuators are designed for the operation of industrial valves. Putting into service is prohibited until the final machinery has been declared in conformity with the provisions of Directive 2006/42/EC.

The following basic requirements in compliance with Annex I of the Directive are respected:
Annex I, articles 1.1.2, 1.1.3, 1.1.5, 1.2.1, 1.2.6, 1.3.1, 1.3.7, 1.5.1, 1.6.3, 1.7.1, 1.7.3, 1.7.4

The manufacturer shall be obligated to electronically submit the documents for the partly completed machinery to national authorities on request. The relevant technical documentation pertaining to the machinery described in Annex VII, part B has been prepared.
Authorized person for documentation: Thomas Weber, Im Erlet 2, 90518 Altdorf, Germany

The latest versions are available for download at www.sipos.de.

2 Assembly and connection

If the devices are used in non-industrial applications with increased safety requirements, they have to be ensured by additional safety measures during assembly.

2.1 Mount to valve/gear

2.1.1 General assembly instructions for all output shaft types

- Mounting and operation is possible in any position. Heed the local ambient conditions, in particular the vibration load, which can be caused when mounting an actuator to a vibrating valve.
- Do not apply force and avoid shocks!
- Check that the end connection flange and the output shaft type match the valve/gear.
- Thoroughly clean mounting faces of output mounting flanges at actuator and valve/gear.
- Slightly grease the connection points.
- The bolts used upon delivery are not greased. Use bolts with at least 8.8 quality. If similar stainless steel bolts are used, they should be greased slightly using petroleum jelly. Use screws with a depth of engagement of at least 1.4 x the thread diameter.
- The housing of the SIPOS SEVEN actuator consists of an aluminum alloy which is corrosion resistant under normal environmental conditions. If the paint was damaged during assembly, it can be touched up with original paint supplied in small quantity units by SIPOS Aktorik.

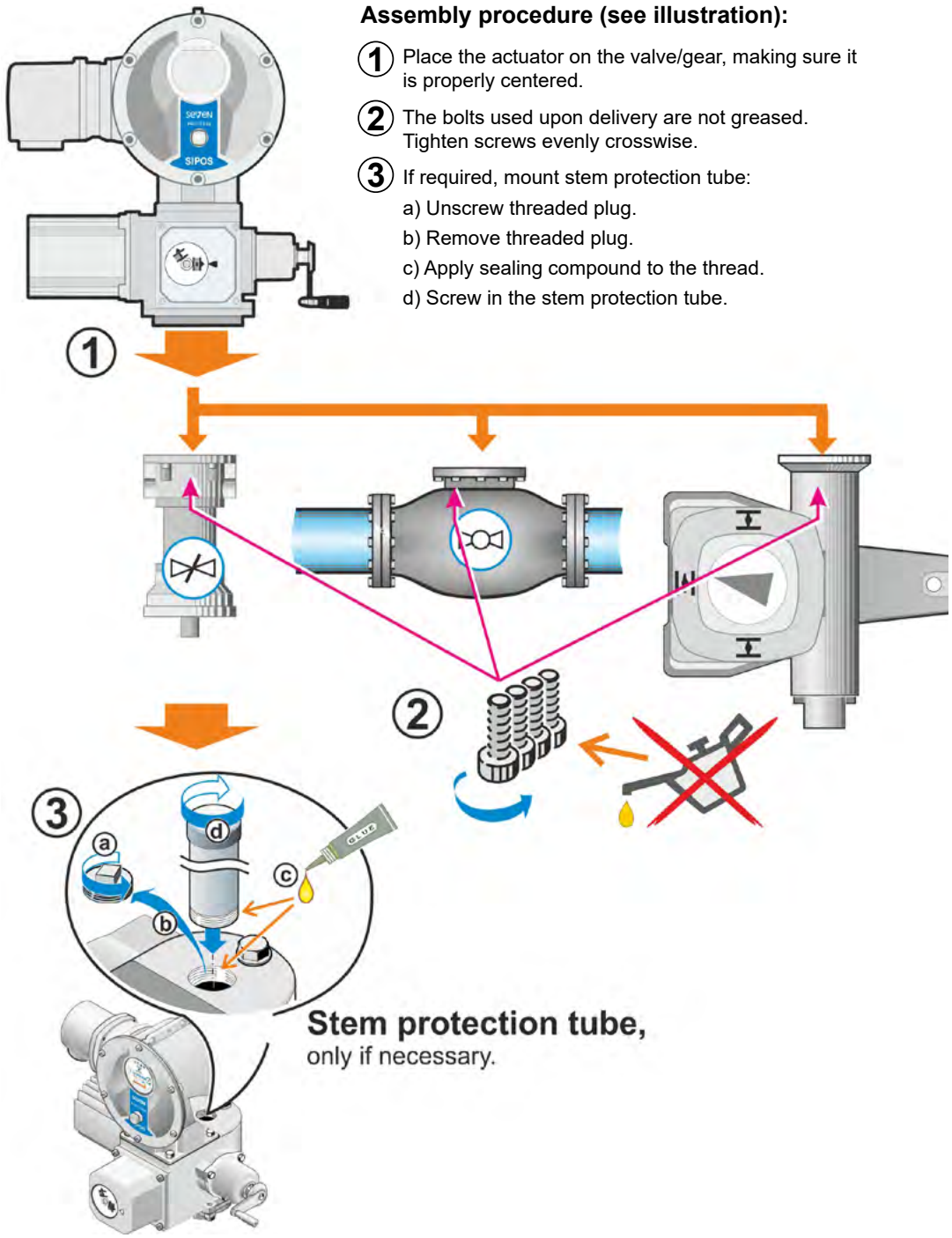

Assembly procedure (see illustration):

1. Place the actuator on the valve/gear, making sure it is properly centered.
2. The bolts used upon delivery are not greased. Tighten screws evenly crosswise.
3. If required, mount stem protection tube:
   a) Unscrew threaded plug.
   b) Remove threaded plug.
   c) Apply sealing compound to the thread.
   d) Screw in the stem protection tube.

2.1.2 Output shaft type A

Assembly instruction

The stem nut is screwed onto the valve stem by turning the crank handle or the hand wheel.

⚠ Spring-loaded A end shafts are subject to high pre-tension. Fitting and removal of the stem nut for thread cutting must be performed in accordance with assembly instructions!

Fitting and removing the stem nut

If the stem nut was not ordered with a trapezoidal thread (suffix "Y18" to order number), or if the stem nut is worn, it must be dismantled/replaced:

1. Unscrew centering ring from output mounting flange and take off stem nut together with axial needle-roller assembly and axial bearing washers.
2. – If the stem nut was delivered without thread, cut thread into the stem nut.
   – Replace worn stem nut.
3. Assembly is performed in reversed order. Lubricate axial needle-roller assembly and axial bearing washers with ball bearing grease and make sure that the radial shaft seal (6) is inserted correctly.
4. Using a grease gun, press ball bearing grease into the nipple until lubricant is discharged between the centering ring and the stem nut.

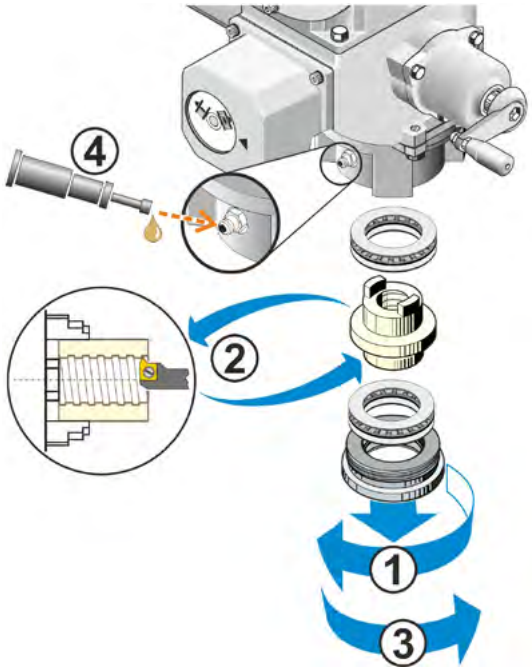

⚠ For output shaft form A, ensure that the valve stem must be greased separately!

2.2 Separate mounting

If the ambient conditions such as extreme vibration, high temperature and/or if access is difficult, the electronics unit is to be mounted separately from the gear unit. The required assembly kit can be ordered directly with the actuator or separately as accessory (2SX7300-. . .). The kit is available with different versions of the connecting cables:

- Standard lengths: 3 m, 5 m, 10 m;
- With additional equipment (filter) up to 150 m.

Assembly procedure

Before starting the work, disconnect actuator from the mains!

1. Install mounting bracket at the mounting location of the electronics unit.
2. Mount electronics unit with O-ring at mounting bracket.
3. Screw connection hood of the connecting cable to the mounting bracket.
4. Mount connection hood of the connecting cable to the gear unit:
   - Standard assembly, refer to **A**.
   - For assembly with stem protection tube, rotate connection hood by 90° or 180°, refer to **B**.
5. If equipped with filter: Set "> 10 m with LC filter" for parameter "Separate mounting" in the 'Special parameters' menu.

- During installation ensure that the O-rings are fitted correctly.
- Movable parts, e.g those of the swing lever of the part-turn actuator, must not be impaired by the cables.
- The cables should not touch the motor. The motor might become very hot.

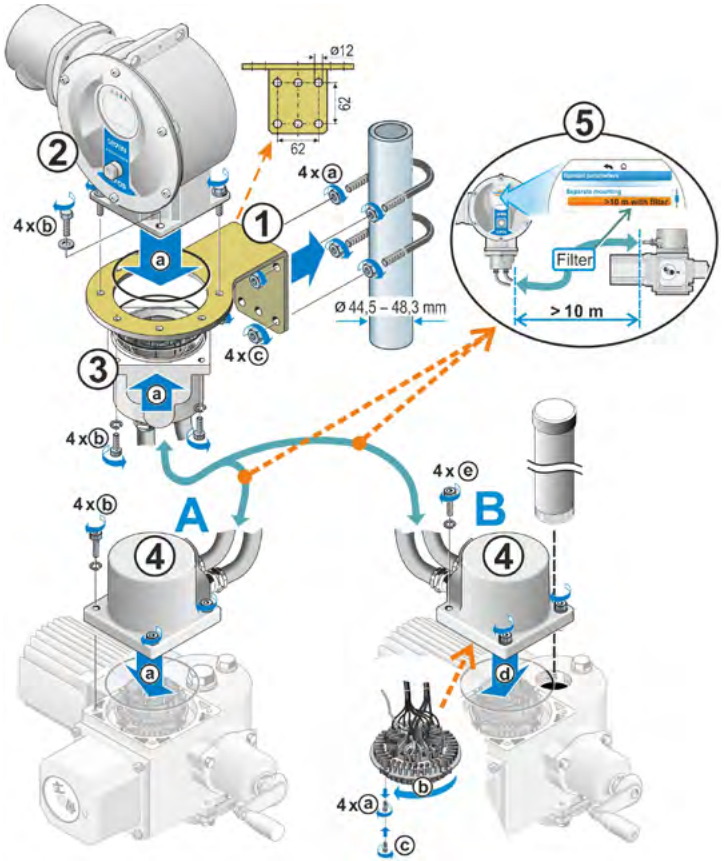

Fig.: Separate mounting
A = Standard, B = with stem protection tube

2.3 Remote control unit

The actuator can also be equipped with a remote control unit that allows local operation in distances up to 100 m. The remote control unit has the function of a second local control unit, refer to illustration on the right. For more detailed information, refer to "Operation instructions PROFITRON/HiMod".

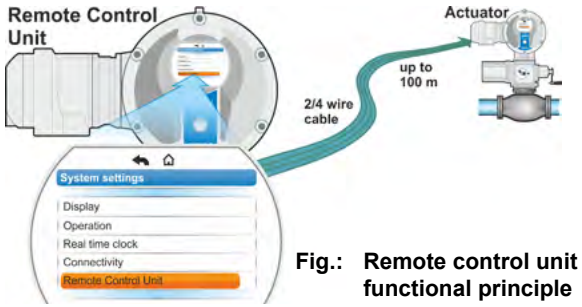

Fig.: Remote control unit functional principle

2.4 Electrical connection

Assembly procedure (refer to illustration on the next page):

1. Unscrew connection hood.
2. Dismantle plug element from connection hood.
3. Connect connecting cables to plug element in accordance with the terminal plan enclosed in the connection hood. Fasten plug element and connection hood again.
4. For fieldbus connection: Unscrew cover and connect data cables. Fit cover and tighten screws.
   For version with PROFINET, refer to Operation instructions Y070.538/EN.
5. Ground actuator if required.

- Dangerous voltages are also applied when the motor is at standstill.
  Before opening the connection hood, disconnect supply voltage from the actuator. Allow **approx. 1 min.** for the capacitors to discharge and do not touch any contacts.
- The supply voltage must always lie within the voltage range specified on the name plate.
- On site fuses and disconnect switches are required for short circuit protection and enabling the actuator. For the current values for sizing, refer to the "Technical data".
- **Mains cable**: Use metal cable glands for mains connection.
- **Signal cable**: Use metal cable glands with cable shielding for the connection of the signal cable to avoid the occurrence of electronic faults. The signal cable must be shielded and the shield must be fixed on both sides. Ensure careful connection of the screen within the cable gland!
- It must be ensured that the **cable glands and seals** (O-rings) are fitted carefully and correctly in order to guarantee the enclosure protection! For details of the permissible conductor cross-sections, see wiring diagram.
- Cable glands and cables are not included in the scope of delivery.

3 Operation

3.1 Manual operation

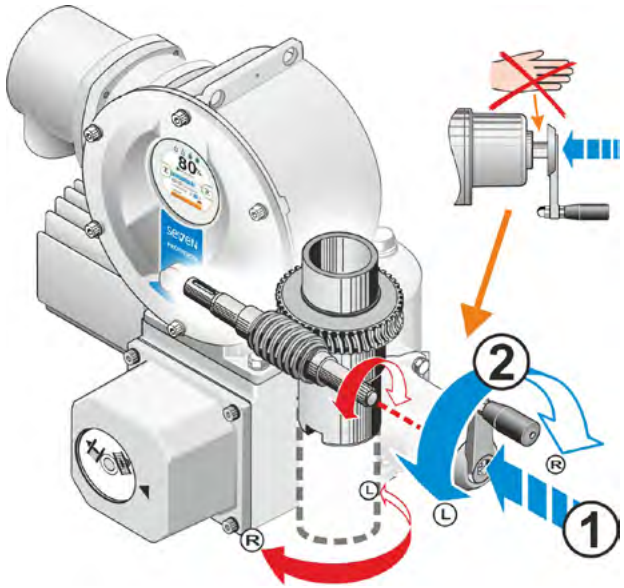

Fig.: Manual operation for 2SA7

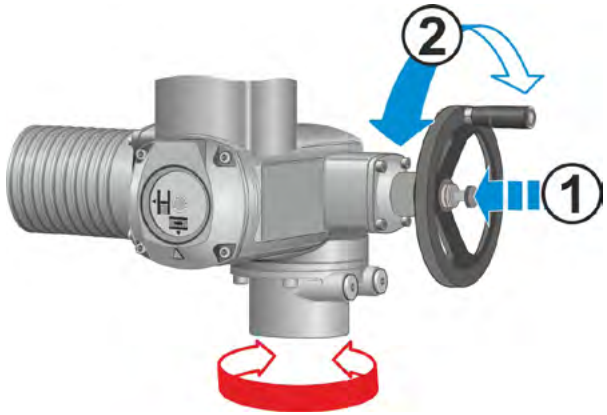

Fig.: Manual operation for 2SQ7

3.2 Indications of the LEDs

1 Depending on the actuator ordered, the colors of the light emitting diodes might vary:
a) Standard, b) with add. version C73.

2 LED (CLOSE);
– is flashing = Actuator operates in CLOSE direction;
– is continuously illuminated = Actuator is in end position CLOSED.

3 LED (LOCAL);
is illuminated = LOCAL control is selected.

4 LED (REMOTE);
is illuminated = REMOTE control is selected.

5 LED (OPEN);
– is flashing = Actuator operates in OPEN direction;
– is continuously illuminated = Actuator is in end position OPEN.

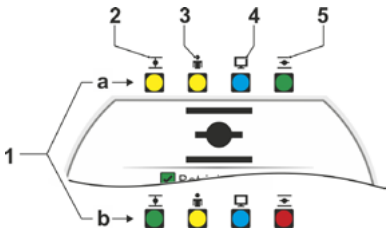

Fig.: LEDs
1a = Standard
1b = add. version C73

3.3 Status indication

1 Actuator status signals.

2 Position indicator:
Actuator position in end position OPEN.
In the end position, the respective end position symbol is displayed instead of the number.

3 Symbol for end position OPEN , end position CLOSED .

4 Color-shaded symbol indicates the selected control type:
LOCAL , REMOTE or OFF .

5 Flag of the selected language.

6 Start menu.

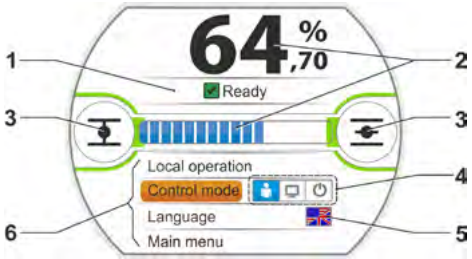

Fig.: Status indication

3.4 Display – position bar

The position bar provides information on the cut-off mode in the end positions and on the current status of the actuator.

1 Cut-off mode in end positions:
1a = Orange closed circle means 'torque-dependent cut-off mode'.
1b = Green open circle means 'travel dependent cut-off mode'.

2 End position range indication:
2a = End position range of end position CLOSED.
2b = End position range of end position OPEN.
The length of the indication bar represents the scope of the end position range.

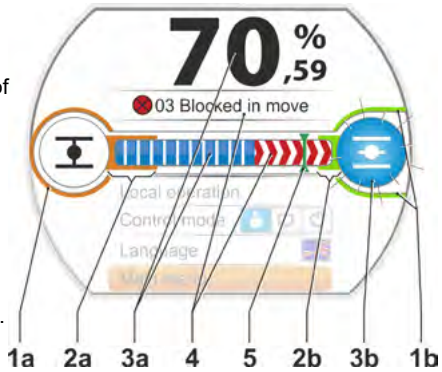

Fig. 1: End position symbols and progress bar

3 Indication during operation:
3a = The value indicates how far the actuator has been operated to position OPEN.
The position bar indicates the progress during operation (opening and closing the valve).
3b = The symbol of the end position into which the actuator is currently being operating is flashing.

4 Should a block occur during operation, the respective status message is indicated and the remaining travel is represented as red hatched area.

5 If an EMERGENCY position or a setpoint is being approached, the target position is indicated by a symbol (vertical line on the position bar).

6 If the actuator is in one of the end positions, the respective symbol is shaded in blue.
in our example end position OPEN (fig. 2, item 6):

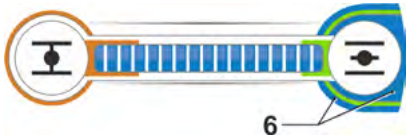

Fig. 2: Indication Actuator in end position OPEN

3.5 Navigation through the menus

Operation of the Drive Controller

= **Turn** Drive Controller (rotary/push button):
Selection (selected menu item is shaded in orange).

= **Press** Drive Controller:
Confirm selection.

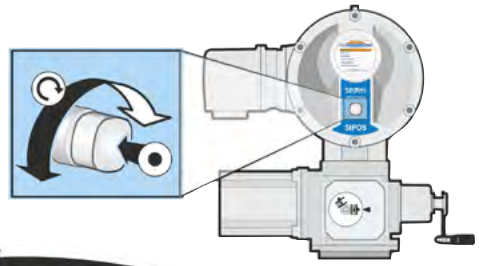

Navigation

a = Select 'main menu' and confirm .
Display changes to 'Main menu'.

b = Select 'Parameter' and confirm .
Display changes to 'Parameter' menu.

c = Select 'Valve' and confirm .
Display changes to "Valve" menu.

d = Select 'Back', or and confirm :
– = Display changes to status indication.
– = Display changes one level back to 'Parameter' menu.

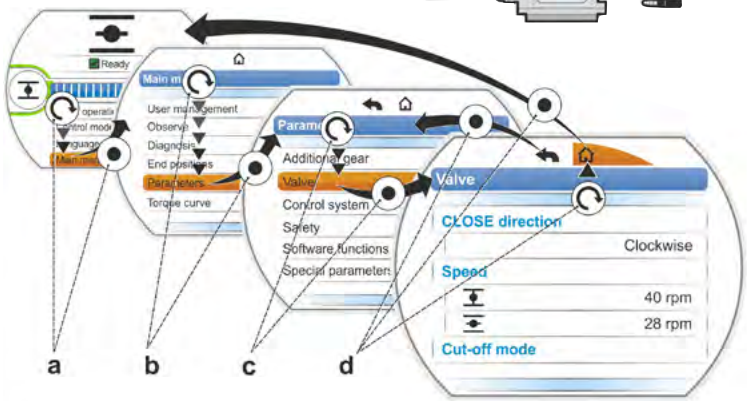

4 Commissioning

4.1 Notes on user management

To ensure that unauthorized persons do neither change the parameters by accident nor willfully, many functions as well as parametrization can only be accessed with a permission.

Permission for operating the actuator is granted in levels, the so-called user levels; different variants of access protection can thus be selected.

The following table shows the potential access protection to the user levels/user accounts.

	Access protection		
	4-digit password (PIN: 0 – 9)	**20-character password: (123.../Abc...)**	**Name + 20-character password**
Login configuration[1] ▶	**'User levels'**	**'Strong password'[2]**	**'User account'[2]**
User levels	Default password setting	Default password setting	**No** default password setting
Observer[2]	---	---	---
Operator	0000	0000	Password must be assigned when creating the user account.
Supervisor	9044	9044	
Expert	9044	9044	
Administrator	9044	9044	
Change password subsequently	in the logged on user level.	in the logged on user level.	in the own user account.

[1] Changing the login configuration is only possible with administration rights.

[2] The 'Observer' user level is not protected by a password. In this user level, parameters can be viewed but not changed.

The following generally applies (refer also to operation instructions, chapter 6)**:**

① Once: Set up user management

In the "Login Configuration" of the 'User Management' menu, the type of access protection is defined and how the operators should log in either via

- 'User levels' (4-digit password, default), **or**
- 'Strong password' (individual password with up to 20 alphanumerical characters), **or**
- 'User account' (name and individual password with up to 20 alphanumerical characters).

② Prior to each session: Log on to actuator

Depending on the login configuration:

- **'User levels'**: Log on to the desired user level using the 4-digit password (PIN) login; or
- **'Strong password'**: Log on to the desired user level with the 'Strong password'; or
- **'User account'**: Select personal user account and log in with the pertaining password.

4.2 Log on to actuator

For end position adjustment, at least the 'Supervisor' user level has to be enabled.

If the login configuration/access protection has not yet been set for a new actuator, the default login via "User levels" set in the factory and the "Default password setting" applies, refer to table on the left.

Operation sequence: Log on as 'Supervisor'

1. Select 'User Management' in the main menu, set the orange selection marker to the line below 'Current user' (fig. item. 1) and confirm (fig. item 2).
2. Set the orange selection marker to the 'Supervisor' user level (item 3) and confirm (item 4). Display changes to prompt of the 4-digit password (PIN) and the frame of the first digit is shaded in orange.
3. Press Drive Controller (5).
   The 0 digit is displayed.
   Enter password:
   If the user has not yet entered an individual password, the default password applies (refer to the table on the left). In our example, continue with **b)**.
   If the displayed digit is
   a) not to be changed:
   Press Drive Controller (7), the frame of the next digit changes to orange.
   or
   b) is to be changed:
   Turn Drive Controller (6), until the desired digit of the password is displayed (in our example 9) and
   confirm (7). The changed digit is accepted and the next digit is framed in orange.
4. Repeat step 3 (item 6 and 7) accordingly until all four digits have been entered. Once the fourth digit has been confirmed, the selection marker jumps to 'Continue'.
5. Press Drive Controller (8).
   Display changes to the 'User management' menu, and the new 'Current user' is displayed, in our example 'Supervisor'.

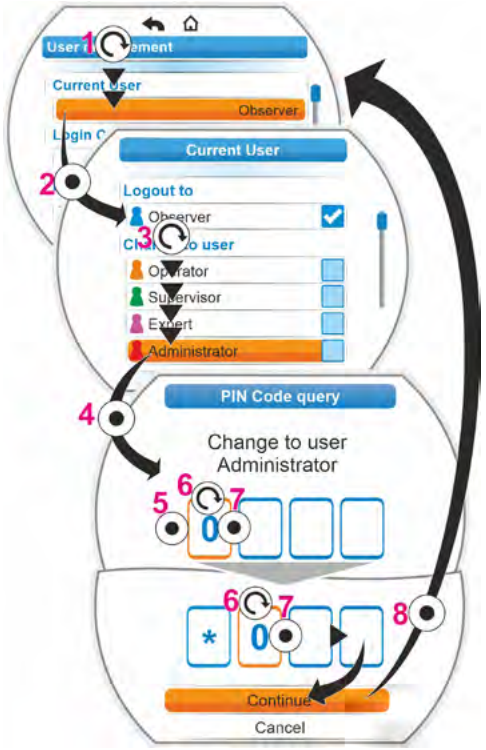

Fig.: Log on 'Supervisor' with PIN

Once work is complete

Reset user access level: 'User management' --> Set 'Observer'.

'Observer' is the user level (default setting) the actuator changes to when not operated for some time. **Exception:** If a user level is assigned the password "0000", this user level remains enabled, even if the password "0000" has also been assigned for lower user levels.

4.3 End position adjustment

The complete commissioning procedure including parameterization is described in detail in the ”Operation instructions PROFITRON/ HiMod“.

For end position adjustment, at least the ’Supervisor’ user level has to be enabled, refer to previous chapter 4.2.

End position adjustment is divided into 8 main steps:

1. Select end position ’New setting‘; with or without valve parameter.
2. If required; set valve parameter.
3. Adjust signaling gear reduction ratio (only for actuators with signaling gear).
4. Adapt signaling gear reduction ratio to valve (only for actuators with signaling gear).
5. Approach and accept first end position (OPEN).
6. Adjust central wheel position on signaling gear (only for actuators with signaling gear).
7. Approach and accept second end position (CLOSED).
8. Change over to REMOTE control.

If LOCAL control is changed to “remote“ control, the actuator is operated if an operation command by the automation system (DCS) is present!

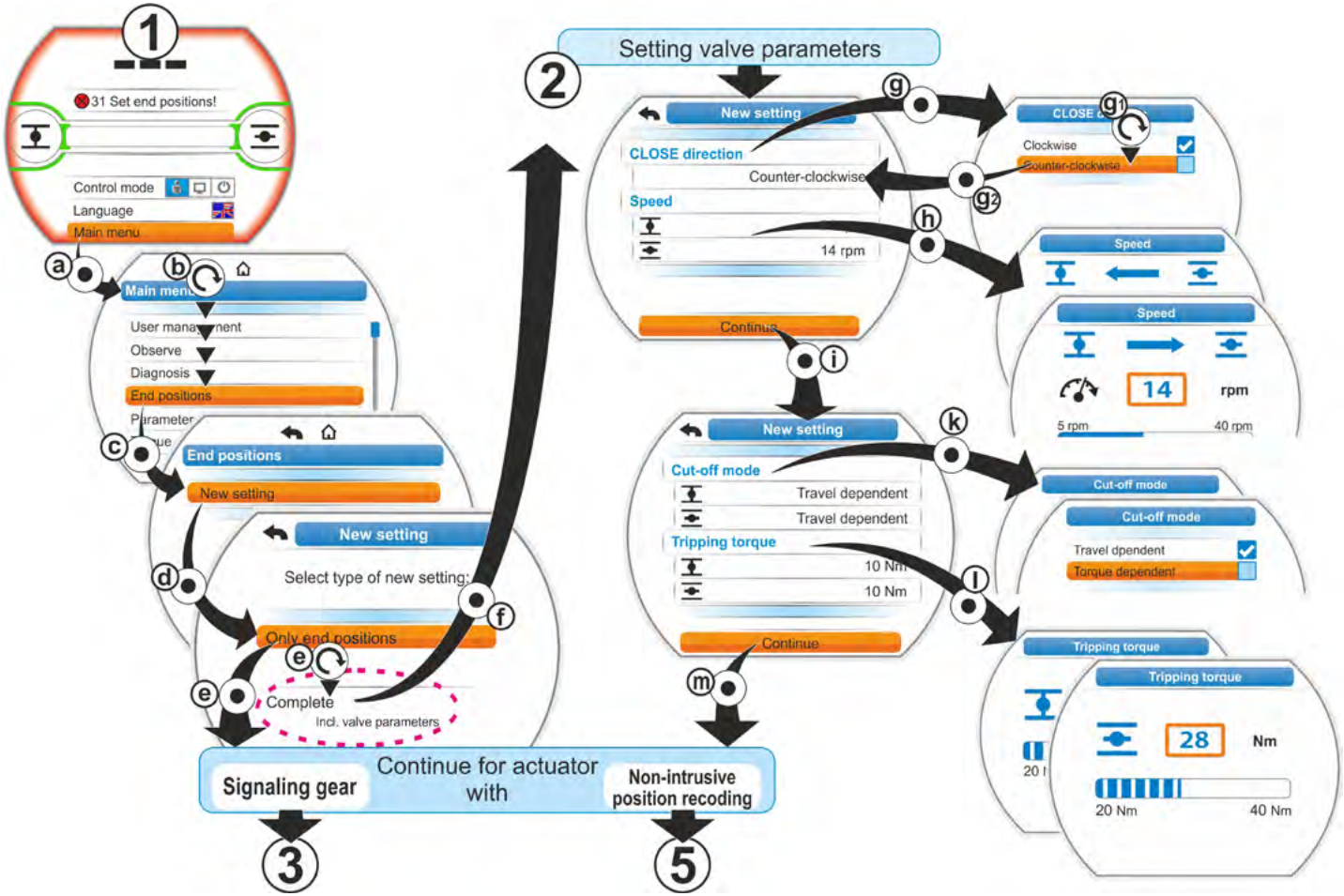

3 Adjust signaling gear ratio

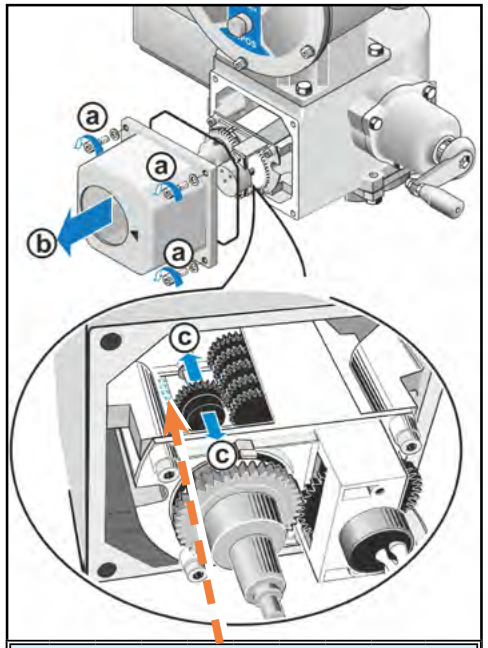

10 possible settings (scale) for the valve travel [rev/stroke] without additional gear									
For actuator type 2SA7.1/2/3/4/5/6									
0.8	2.1	5.5	14	**36***	93	240	610	1575	4020
For actuator type 2SA7.7/8									
0.2	0.52	1.37	3.5	**9***	23.2	60	152	393	1005
*Standard									

An adjustment of the signaling gear ratio is not required, if

the actuator was delivered mounted on a valve and the end positions were already adjusted at the valve manufacturer's factory

or

the values for revolutions/stroke or mm/travel or degrees were already specified in the order.

A check has to be performed at any rate!

If nothing has been specified, the default values (refer to values with* in table above) are adjusted.

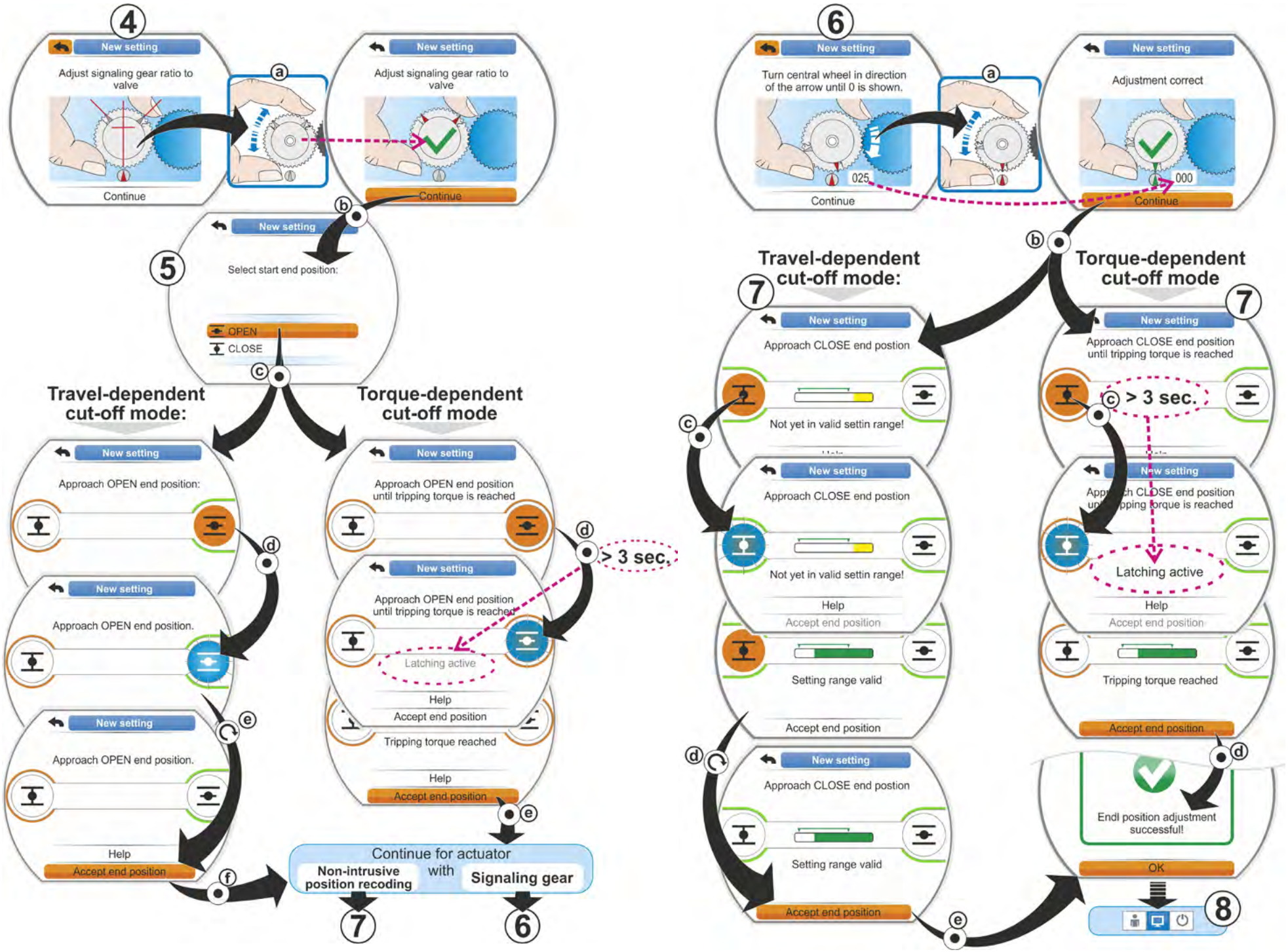
4
New setting
Adjust signaling gear ratio to valve
Continue
a
New setting
Adjust signaling gear ratio to valve
Continue
b
5
New setting
Select start end position:
OPEN
CLOSE
c
Travel-dependent cut-off mode:
Torque-dependent cut-off mode
New setting
Approach OPEN end position:
New setting
Approach OPEN end position.
New setting
Approach OPEN end position.
Help
Accept end position
d
e
f
New setting
Approach OPEN end position until tripping torque is reached
New setting
Approach OPEN end position until tripping torque is reached
Latching active
Help
Accept end position
Tripping torque reached
Help
Accept end position
d
> 3 sec.
e
Continue for actuator
Non-intrusive position recoding
with
Signaling gear
7
6
6
New setting
Turn central wheel in direction of the arrow until 0 is shown.
025
Continue
a
New setting
Adjustment correct
000
Continue
b
Travel-dependent cut-off mode:
Torque-dependent cut-off mode
7
New setting
Approach CLOSE end postion
Not yet in valid settin range!
c
New setting
Approach CLOSE end postion
Not yet in valid settin range!
Help
Accept end position
Setting range valid
Accept end position
d
New setting
Approach CLOSE end postion
Setting range valid
Accept end position
e
7
New setting
Approach CLOSE end position until tripping torque is reached
c
> 3 sec.
New setting
Latching active
Help
Accept end position
Tripping torque reached
Accept end position
d
Endl position adjustment successful!
OK
8

4.4 Mechanical position indicator adjustment

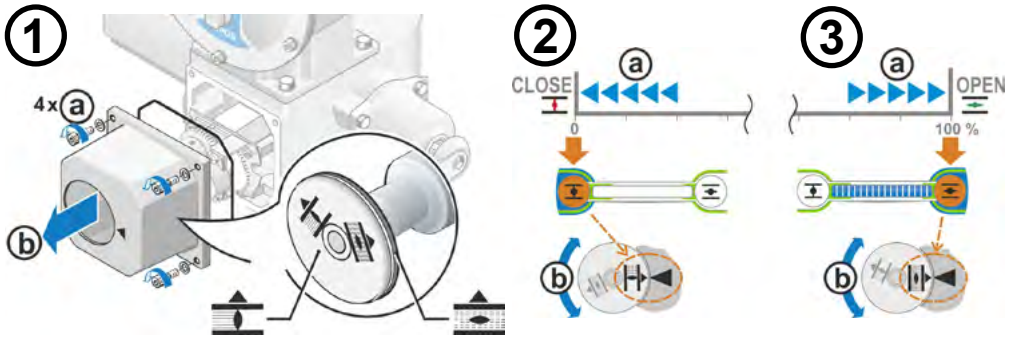

5 Maintenance, inspection, service

5.1 General safety information

Prior to any intervention on the actuator, ensure that the action(e.g. possible operation of valves, for example) will not result in injury to persons or faults in the plant.

- Disconnect all poles of the actuator or plant section in accordance with the regulations (including 24 V DC).
- Prevent accidental reconnection.

This can also be achieved by removing the connection hood.

Furthermore, the general safety regulations have to be observed, fit barriers or covers to neighboring live components.

5.2 Notes on inspection

5.2.1 Inspection

After commissioning and **after approx. 50 operating hours or 1 year**, submit the actuator to a general inspection to verify that

- correct functioning is guaranteed,
- no unusual noises/vibration occur,
- the fixing components are not loose,
- no leakages occur.

To touch up potential damage to paint, original paint is supplied in small quantities at SIPOS Aktorik.

Further checks may be necessary in accordance with the plant-specific conditions.

5.2.2 Service or inspection

Performing the following maintenance work **every 8 years** under standard device operation conditions, including storage time:

- Replace lubricant within gear housing,
- replace seals,
- check all parts within the direct power drive for wear,
- tighten screw connections of electrical connections.

Depending on the operation conditions, shorter maintenance intervals may be required. This applies in particular to actuators in high temperature version, which have to serviced at least every 2 years.

It is recommended that the services of the local SIPOS Aktorik service centers are utilized for this purpose, refer to **www.sipos.de**. You may also send your requests directly via e-mail to **service@sipos.de**.

5.2.3 Lubricant assignment and quantity

	Actuator type ▶	2SA7.1/2	2SA7.3/4	2SA7.5/6/7/8
Gear oil	Lubricant quantity	760 cm^3	1,600 cm^3	2,400 cm^3
	Filling level[1]	max. 46 mm	max. 58 mm	23 – 27 mm
	Lubricant[2]	Klübersynth GH 6 – 220 N (by Klüber)[3] or Alphasyn PG 220 Polyglycol (by Castrol), Berusynth EP 220 (by Bechem), Panolin EP gear synth 220 (by Kleenoil).		Mobil SHC Gear 220[3]
Other lubrication points[4]	Lubricant quantity	50 cm^3		
	Lubricant[2]	Lubrication grease AR1 (ZEPF)		
Output shaft type A[5] (2SA7)	Lubricant quantity	2 cm^3		
	Lubricant[2]	Commercial ball bearing grease		
2SQ7 part-turn actuator		virtually maintenance-free		

- The manufacturer's instructions and relevant regulations are to be observed when handling and disposing of lubricants.
- Prior to using a new alternative lubricant (compared to lubricant used in the factory), flush and clean the gear and the gear parts. (Avoid mixing the oils!)

[1] Measured from the lubricant surface to the external wall of the housing at oil filling screw.
[2] Ambient temperature range -20 °C – +70 °C.
[3] Lubricant used in the factory.
[4] E.g. sealing rings, gear systems, bearings, feather keys, uncoated surfaces etc.
[5] If applicable.

5.3 Spare parts

With the exception of standardized, generally available components, only original spare parts may be used. Spare parts are usually supplied as complete sub-assemblies (see list below).

When ordering spare parts, always provide the following information:

1. Order number and serial number of the actuator (refer to name plate),
2. Spare parts designation 2SY7 (refer to following list),
3. Quantity required.

No.	Designation	No.	Designation
2SY7001	Electronics unit (010 – 042)	2SY7220	Signaling gear
2SY7041	Cover for electronics unit	2SY7225	Signaling gear cover
2SY7218	Sealing kit	2SY7250	Manual drive
2SY7219	Non-intrusive position encoder (niP)	2SY7252	Handle
Refer also to exploded views in “Operation instructions PROFITRON/HiMod”.			

For further information on spare parts refer also to the ”Recommend spare parts and often used accessories“ document (www.sipos.de ▶ ▶ Product documents ▶ Ordering data).

6 Protection against unauthorized access

6.1 General information

The SEVEN actuator is an electrical device with various user interfaces, used for setting and actuator operation (see also illustration on the right):

- Direct operation at the actuator:
  - Display with Drive Controller (A)
  - Crank handle/hand wheel (E)
- USB and respective software (B)
- Bluetooth and respective software (C)
- Fieldbus (D)

Depending on the application and the place of installation, these interfaces have to be protected against unauthorized access.

The software stored within the actuator is a proprietary software protected against manipulation via digital signatures. Neither Windows not Linux derivatives are used. Spreading of viruses and malware can therefore be excluded.

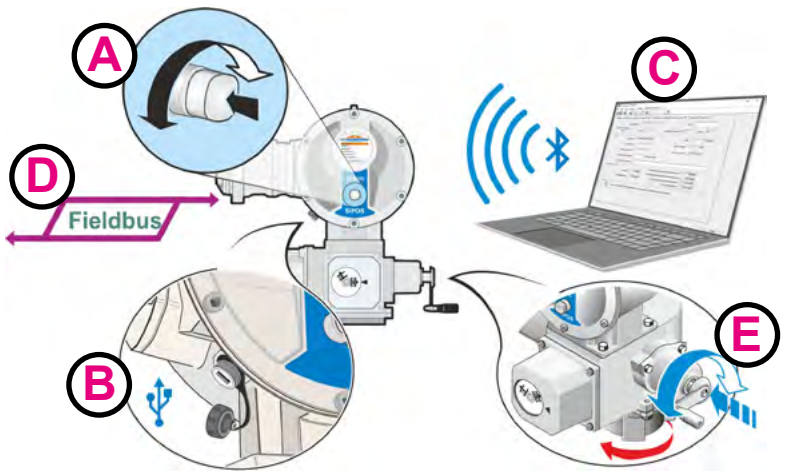

A 6.2 Operation at the device using the Drive Controller

6.2.1 User management

There are five user levels available (refer to chapter “4.1 Notes on user management“ and also chapter 6 of the extensive operation instructions: www.sipos.de ►Product documents ►Instruction manuals).

With the "Observer" user level, only parameters and current actuator states can be displayed. Parameters cannot be changed.

On delivery, the further user levels are protected by a 4-digit code set in the factory.

This access protection (code) can, depending on the user level, be individually changed to

- a 4-digit code (PIN) or
- a 20-character alphanumerical password, or
- an individual user account (name and password)

and thus permission may be granted to the desired extent or restricted (refer to chapter “4.1 Notes on user management“).

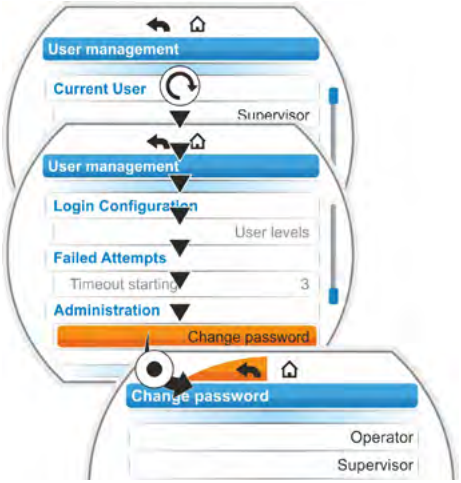

Immediately changing the preset codes during commissioning of the actuator is imperative for protecting the actuator against unauthorized operation!

6.2.2 Block switching LOCAL-REMOTE via binary input

Via the "Mode" binary input, it can be set that switching the LOCAL-REMOTE-OFF control mode:via the Drive Controller is only possible once an enable signal is present. (For the respective programming refer to extensive operation instructions, chapter 8.3.6.)

6.2.3 Block switching LOCAL-REMOTE via fieldbus

If the actuator is accessed via fieldbus. PROFIBUS DP or MODBUS, the LOCAL-REMOTE-OFF switching using the Drive Controller can be blocked via this interface. Access can only be re-enabled via the fieldbus protocol or in case of failure of the cyclic communication.

6.2.4 Mechanical locking of the Drive Controller

A padlock can also be used to prevent unauthorized operation of the Drive Controller. Different variants are available:

- Order no.: 2SX7302-0BS00 Padlock with protective cap
- Order no.: 2SX7302-0BS01 Padlock with locking plate

B 6.3 USB interface

Via the external USB interface, data can be exchanged with the actuator, either with a USB flash drive or PC/laptop via the COM-SIPOS software.

The USB interface is protected by the following conditions and restrictions:

- Only selected USB services are supported (mass storage services in particular are excluded)
- Only the "CDC" service (communication via COM port) is supported;
- HID services are not supported;
- Data from mass storage media is only accepted in encrypted data formats (*.sev, *. ste);
- Encryption is applied during communication with COM-SIPOS.

On request, the external USB interface can be

- separated from the power supply and thus be disabled
- protected by a USB port lock.

Please contact our Service for further information.

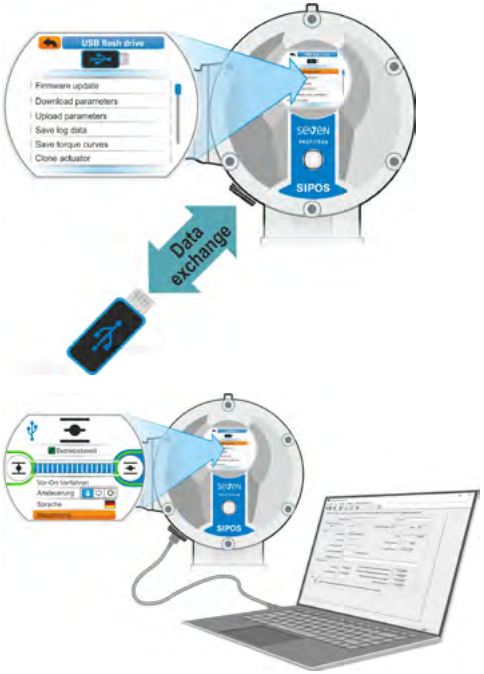

C 6.4 Bluetooth interface

Using the COM-SIPOS software (order no. 2SX7100-3PC02), data can be exchange with the actuator via Bluetooth interface.

To protect the interface,

- encryption is applied in communication with COM-SIPOS;
- the Bluetooth interface can be completely switched off via parameters (module is separated from the power supply).

On request, the Bluetooth interface can be deactivated in the factory (add.version "M40").

D 6.5 Fieldbus interface

The security of the supported fieldbus interfaces PROFIBUS DP, MODBUS, HART and PROFINET is defined by the respective fieldbus standards. The SEVEN actuator only interprets defined data contents and provides information on internal states and parameters. USD and Bluetooth interface do not interfere with the fieldbus interfaces.

E 6.6 Manual operation

Using the crank handle or the hand wheel, the actuator can be operated and control be take over from REMOTE. Manual operation is therefore an important safety feature of the actuator. Depending on the place of installation, the operator has to ensure that the hand wheel is protected against accidental operation. A padlock against unauthorized manual operation is available:

- For 2SA7.1/.2/.3/.4:
  Order no. 2SX7302-0HA01
- For 2SA7.5/.6/.7/.8:
  Order no. 2SX7302-0HA04