SI-2L Specification

rotork® Fluid Systems

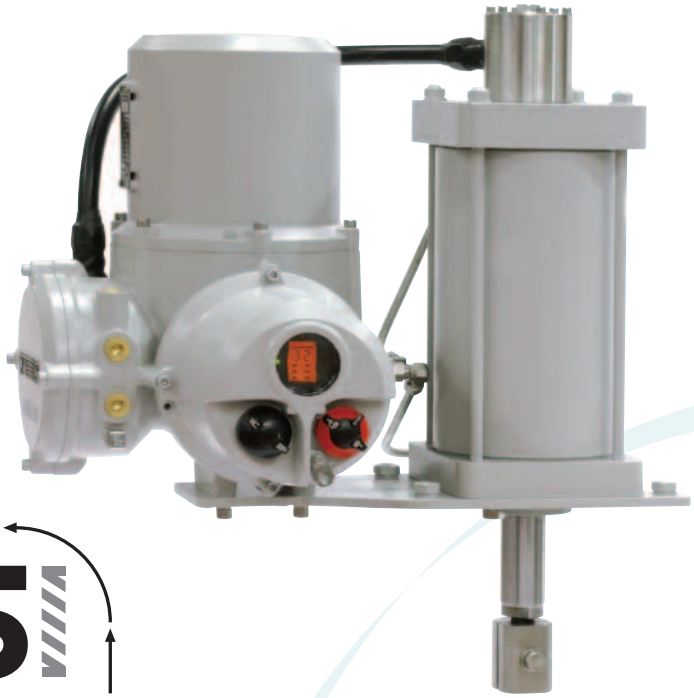

The SKILMATIC® Range

"Intelligent" Electro-hydraulic Linear Valve Actuator

The SI-L are compact and robust electrically operated failsafe spring-return, linear actuators for two-position, ESD or modulating applications. They feature the Rotork double-seal system with separate termination and cable gland compartments and are suitable for all type valves with a linear drive shaft. The linear range is divided into two groups: SI-1L with thrust ranging from 1.76 to 11.88 kN (400 to 2,700 lbf) and stroke length up to 65 mm (2.5"), and SI-2L / SI-2.1L with thrust ranging from 11 to 61.6 kN (2,700 to 14,000 lbf) and stroke length up to 105 mm (4").

SI-1L actuators are watertight and dustight to IP67 / NEMA 6 with the option of IP68 and are also available certified explosionproof for hazardous area gas group IIB applications.

Consisting of a self-contained electro-hydraulic control module and linear spring-return drive, the actuators combine the simplicity of electrical operation with the precision of hydraulic control and the reliability of spring-powered fail-safe action. The spring-return mechanism provides the most reliable means of positioning a valve to the safe condition and can be provided as failsafe close, open, or last position on loss of power or signal failure. They are available as either spring to extend or spring to retract.

For modulating control applications, the control module provides a pulsed hydraulic signal to accurately position the spring-opposed cylinder, resulting in accurate positioning with a resolution better than 0.25%.

The actuators can be configured to accept analogue, digital, or network card input and can be programmed with the Rotork infrared setting too. A wide range of functions can be set with the tool: zero and span limits, deadband, hysteresis, slow band, and partial stroke position are easily adjusted. Optional internal fieldbus communication boards are available for Rotork Pakscan, DeviceNet, Profibus, Foundation Fieldbus and Modbus digital control systems.

Lockable local controls are provided as standard and, for safety critical applications, the local selection can be overridden –proper actuator configuration required. Electro-mechanical end-of-stroke limit switches are also offered for safety critical applications.

A manual override gearbox is available on all sizes.

Features

- Self-contained electrically operated with internal low-pressure electro-hydraulic control module.
- Spring-return for failsafe open, close or lock-in-last position.
- Single-phase, three-phase and 24 VDC power supply options.
- Non-intrusive commissioning and configuration via our hand-held infrared setting tool.
- Local LCD display provides position and internal pressure indication as well as and fault diagnostics.
- Local controls include a lockable Local / Stop / Remote selector and an Open / Close switch.
- Modulating control via 4-20 mA input/output with a resolution < 0.25%.
- Digital control with ESD and partial stroke capabilities.
- Output relays for monitoring, fault alarms and open/close limits.
- Optional fieldbus communications via all common protocols.
- Watertight and explosionproof.
- Double-sealed control module with separate terminal and cable gland compartments.
- Spring-return speeds: single, dual or ESD combination valve options.

Publication F753aE
Issue 04/10

SI-2L Specification

Table 1.1 – Actuator Size *Spring to extend actuator drive shaft*

Code	Stroke Max. mm (inch) (see note 3)	Thrust KN (lbf)				Stroke Speed (mm per second)			
Spring to Extend		Hydraulic Stroke (Open)		Spring-Return (Close)		Hydraulic	Spring-Return (See note table 3 & note 2)		
		Start	End	Start	End		A	B	C
SI-2-L200/105	105 (4")	15.42 (3505)	8.52 (1936)	17.82 (4050)	11.88 (2700)	4.2	4.2	5.8	14
SI-2-L250/105	"	23.88 (5427)	13.14 (2986)	27.71 (6299)	18.48 (4200)	2.6	2.6	3.6	8.8
SI-2-L280/105	"	30.17 (6857)	16.62 (3778)	34.98 (7950)	23.32 (5300)	2.0	2.0	3.0	7.0
SI-2-L320/105	"	39.47 (8972)	21.57 (4904)	46.2 (10501)	30.8 (7000)	1.6	1.6	2.2	5.4
SI-2-L350/105	"	47.9 (10888)	26.68 (6065)	54.78 (12450)	36.52 (8300)	1.3	1.3	1.8	4.4
SI-2-L400/105	"	62.22 (14141)	34.09 (7749)	72.6 (16500)	48.4 (11000)	1.0	1.0	1.4	3.4
SI-2-L450/105	105 (4")	78.75 (17898)	42.95 (9763)	92.4 (21000)	61.6 (14000)	0.8	0.8	1.2	2.7

Table 1.2 – Actuator Size *Spring to retract actuator drive shaft*

Code	Stroke Max. mm (inch) (see note 3)	Thrust KN (lbf)				Stroke Speed (mm per second)			
Spring to Extend		Hydraulic Stroke (Open)		Spring-Return (Close)		Hydraulic	Spring-Return (See note table 3 & note 2)		
		Start	End	Start	End		A	B	C
SI-2-L200/105	105 (4")	15.42 (3505)	8.52 (1936)	17.82 (4050)	11.88 (2700)	4.2	4.2	5.8	14
SI-2-L250/105	"	23.88 (5427)	13.14 (2986)	27.71 (6299)	18.48 (4200)	2.6	2.6	3.6	8.8
SI-2-L280/105	"	30.17 (6857)	16.62 (3778)	34.98 (7950)	23.32 (5300)	2.0	2.0	3.0	7.0
SI-2-L320/105	"	39.47 (8972)	21.57 (4904)	46.2 (10501)	30.8 (7000)	1.6	1.6	2.2	5.4
SI-2-L350/105	"	47.9 (10888)	26.68 (6065)	54.78 (12450)	36.52 (8300)	1.3	1.3	1.8	4.4
SI-2-L400/105	"	62.22 (14141)	34.09 (7749)	72.6 (16500)	48.4 (11000)	1.0	1.0	1.4	3.4
SI-2-L450/105	105 (4")	78.75 (17898)	42.95 (9763)	92.4 (21000)	61.6 (14000)	0.8	0.8	1.2	2.7

NOTES:
Standard stroke lengths include an additional 5 mm to pre-compress the internal spring.
Add "C" for no pre-compression of the internal spring (i.e., SI-1L250/105C).

Table 2 – Failure Mode

Code	Description
0	Fail safe on loss of power supply (in direction of spring).
1	Fail in position on loss of power supply.

Table 3 – Spring-Return Speed & ESD Options

Code	Description
0	Speed A – Single internal solenoid.
1	Speed B – Dual internal solenoid.
2	Speed C – Single internal & external solenoid (note 5).
3	Speed D – Slow acting internal solenoid, consult factory.
6	Speed A – Hardwired single internal solenoid (note 6).
7	Speed C – Hardwired single internal & external solenoid (note 5 & 6).
8	Speed B – Hardwired dual: internal solenoid, no partial stroking (note 6).

Table 4 – Supply Voltage

Code	Description
0	1-phase 115 VAC ± 10% 50/60 Hz.
1	1-phase 230 VAC ± 10% 50/60 Hz.
2	24 VDC ± 10%.
3	3-phase 380-480 VAC ± 10% 50/60 Hz.

Table 5 – Control

Code	Description
0	Standard digital control (open/close/partial stroke).
1	Analogue control 4-20 mA or 0-10 VDC (note 4).
2	Pakscan.
4	Modbus single-channel.
5	Modbus dual-channel.
6	Profibus dual-channel.
7	DeviceNet.
8	Foundation Fieldbus.
9	Profibus single channel.

GENERAL NOTES:

1. Select one option from each table except table 10 which has multiple options.
2. Stroke speed is typical for all actuators with no load at 20 °C ±10%. Speed "A" resolution <0.2%, Speed "B" resolution <0.5%, Speed "C" for ESD applications resolution 1%.
3. Non standard stroke lengths and thrusts are available upon request.
4. All actuators are available with 4-20 or 20-4 mA output, powered internally by an isolated 24 VDC supply or external customer supply.
5. All external solenoid options are waterproof IP67, not IP68. FM & CSA certified actuators available to -20 °C only.
6. For hardwired 24 VDC ESD option, on loss of supply voltage actuator will fail in position and on loss of ESD signal will fail safe.
7. ATEX certified linear actuators are only available to -20 °C.

Ordering Information and Model Code

ACTUATOR SELECTION SI-2-L250/105 - 0 0 2 - 1 0 - 0 0 A A

Table 1	Actuator Size
Table 2	Failure Mode
Table 3	Return Speed Options
Table 4	Supply Voltage
Table 5	Control Option
Table 6	Certification
Table 7	Cable Entries
Table 8	Hydraulic Fluid / Operating Temperature
Table 9	Mounting
Table 10	Accessories

Table 6 – Certification

Code	Description
0	WT: Watertight IP67.
1	ATEX: Hazardous area gas group IIB (IP67).
3	FM: Hazardous area gas group IIB (IP67).
4	CSA: Hazardous area gas group IIB (IP67).
5	Gost: Hazardous area gas group IIB.

Table 7 – Cable Entries

Code	Description
0	M25 x 1.5P
1	M20 x 1.5P adaptors
2	½" NPT
3	¾" NPT
4	1" NPT

Table 8 - Hydraulic Fluid/Operating Temperature

Code	Description
0	Mineral fluid -15 to +60 °C.
3	Food grade fluid -10 to +60 °C.
4	Silicone fluid -30 to +60 °C (note 5 & 7).
5	Silicone fluid / low temperature seals -40 to +60 °C (note 5 & 7).

Table 9 – Mounting

Code	Description
A	Vertical stem above valve.
B	Vertical stem below valve.
C	Valve stem horizontal.
D	Vertical stem above valve with valve mounting kit.
E	Vertical stem below valve with valve mounting kit.
F	Valve stem horizontal with valve mounting kit.

Table 10 – Accessories

Code	Description
A	None.
B	Manual override (Handpump).
D	Watertight IP68 (7m for 72 hours).
E	Mechanical indication switches (2 off).
G	Hardware ESD configuration (failsafe actuators only).
H	All cable entries plugged.
J	Viton seals.

GENERAL NOTES:

1. Select one option from each table except table 10 which has multiple options.
2. Stroke speed is typical for all actuators with no load at 20 °C ±10%.
3. All actuators are available with 4-20 or 20-4 mA output, powered internally by an isolated 24 VDC supply or external customer supply.
4. External solenoid options available waterproof to IP67, not IP68. FM & CSA certified actuators available to -20 °C only.
5. For hardwired 24 VDC ESD option, on loss of supply voltage actuator will fail in position and loss of ESD signal will fail safe.
6. Flameproof actuators for gas group IIC are available for temperature range -20 to +60 °C.

Certification

ATEX- II 2 G - EEx de* IIB T4 (T_{amb} -40 to +60 °C)
EN60079-0, EN60079-1, EN60079-7, EN13463-1

FM - Class I, Zone1 AEx de* IIB T4 (Ta -40 to +60 °C)

CSA – Ex de* IIB T4, - 40 °C ≤ Ta ≤ 60 °C
Product Class 2258 02 (approval apply to the power module – Full actuator assembly will be subject to CSA inspection). * 'e' increased safety available on single phase & DC supply voltage only.

Note: Certification temperatures are not operating temperatures.

Setting Tool: ATEX, EEx ia IIc T4 (intrinsically safe)
FM, INT SAFE Class I, Div 1 Groups A, B, C, D.
CSA, Ex ia, INT SAFE, Class I, Div 1 Groups A, B, C, D.
INMETRO, BR-Ex ia IIC T4 (intrinsically safe)
Supplied only with INMETRO approved actuators

Safety Integrity: Designed to SIL 3.

Enclosure: Watertight to IP67 / NEMA 6, double-sealed protection with separate cable gland and termination compartment. Optional to IP68, 7 meters /72 hours. Consult factory for alternative depth/pressures.

Materials

Control Module: Aluminium.

Actuator Body: Steel.

Actuator Springs: Steel.

Piping: 316 Stainless steel (hard piped).

Paint Finish: 2-pack epoxy silver grey (150 microns thick).

Mechanical

Operating Temperature: See table 8.

Thrust / Speed: See table 1.

Stroke: Up to 105 mm (4"). Consult factory for options.

Weight: See dimensional detail on last page.

Failure Mode: Fail safe in the direction of the spring or fail in last position.

Action: Actuator shaft extends on spring return or actuator shaft retracts on spring return.

Hydraulic Fluid: See table 8.

Max. Working Pressure: 12 bar (175 psi).

Manual Override: Optional hydraulic hand pump.

Internal Pressure Transmitter: Displayed as a percentage of maximum working pressure.

Mounting: Valve stem vertical or horizontals (see table 9).

Electrical

Electrical Supply: 1-phase 115 or 230 VAC, 3-phase 380 to 480 VAC or 24 VDC.

Supply Tolerance: Supply voltage ± 10 %. Frequency 50/60 Hz ± 5 %.

Power Consumption: Power direction: 1-phase 320 VA, 3-phase 240 VA & 24 VDC - 225 VA maximum.

Motor Protection: Thermal Cutouts, Insulation class F.

Cable Entries: Power module has a minimum of four spare entries (see table 7). See drawing SMW-SI-010 for options.

Position Feedback: EX: Linear position transducer, non-contact, magnetostrictive. WT: Linear potentiometer.

Remote Digital Inputs: Open, close, maintain, ESD and partial stroke. 20 to 60 VAC/DC standard or 60 to 20 VAC optional. Consult factory for other voltages. 5 mA minimum duration 300 ms. DC inputs must be +ve switched.

Optional Limit Switches: Two electro-mechanical SPDT volt-free switches. Rating 5A minimum at 230 VAC (see table 10).

Electrical *continued*

Non-Intrusive Setting: Sealed control module with infrared setting from the Rotork standard Setting Tool. All values are held within EEPROM to maintain settings within the memory on power failure, the actuator does not use a battery backup.

Display: LCD display for viewing of valve position, internal pressure and diagnostics screens. LED's are provided to indicate limits and intermediate state in the remote mode.

Control

Control Options: Remote digital (open, close, maintain), emergency shutdown and partial stroke; or analogue modulating (input 4-20 mA or 0-10 VDC).

Resolution: <0.2% of full scale.

Repeatability: <0.2%.

Duty Rating: 90%.

Output:- 4-20 or 20-4 mA, powered internally by an isolated 24 VDC supply or external customer supply.

Function Settings: Deadband and hysteresis adjustable 0-99%, partial stroke adjustable 0-99%, interrupt timer and ESD action.

Interrupt Timer: To slow the rate of travel. Pulse ON and OFF duration selectable from 100 ms to 99 sec. Timer does not operate with loss of power.

Local Controls: Lockable Local/Stop/Remote selector switch and local Open/Closed switch.

Alarm and Limit Relays: Volt-free normally open or normally closed contacts rated 5 mA to 5 A 120/230 VDC, 30 VDC.

Alarm Monitor relay: De-energised on loss of mains power; hardware, local controls or position sensor fault; or EEPROM error. Optional signal inverted to de-energise monitor relay for low power applications.

Alarm Fault Relay: Energised on position, pressure sensor fault, over pressure mid-travel (torque) under pressure, stalled, incorrect direction, loss of control signal and hydraulic control module fault. Also on unsuccessful partial stroke and alarm monitor faults described above.

Limit Relays: Two latching relays to indicate when the actuator is at the open or closed limit set within the software.

Fieldbus Communication Options: Internally mounted.

Pakscan: Rotork fieldbus system for remote control and status indication over a fault tolerant two-wire serial link.

Modbus: Single and dual communication highways. RS485 Modbus protocol RTU.

Profibus DP: Fully compatibility with EN 50170.

Foundation Fieldbus: An IEC 61158-2 compliant interface module allows connection to a Foundation network.

DeviceNet: ODVA certified DeviceNet interface with full status data feedback, digital and analogue control.

Consult RFS regarding resolution on all fieldbus cards for for modulating applications.

Rotork reserves the right to change specifications without notice.

rotork®
Fluid Systems

SI-2L Specification

SI-2L Dimension & Mounting Details

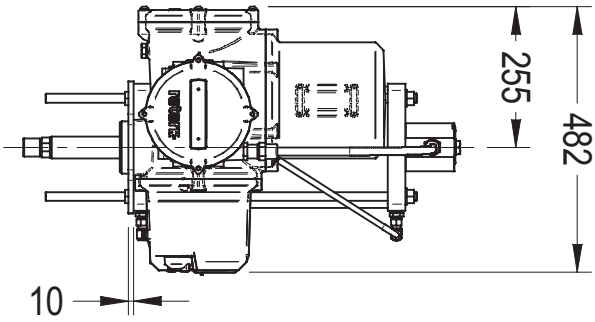

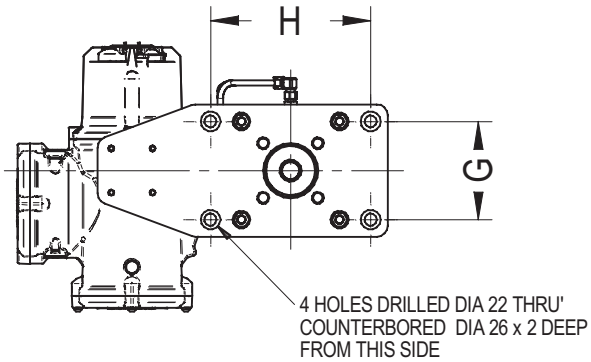

DIMENSIONS (mm)	ACTUATOR CODE						
	SI-2 L200/105	SI-2 L250/105	SI-2 L280/105	SI-2 L320/105	SI-2 L350/105	SI-2 L400/105	SI-2 L450/105
A	591	577	633	639	CF	CF	CF
B	200	200	200	200	CF	CF	CF
C	30	30	30	30	CF	CF	CF
D	M22x1.5P	M22x1.5P	M22x1.5P	M22x1.5P	CF	CF	CF
E	683	743	783	823	CF	CF	CF
F	500	535	565	573			
F*	584	619	649	657			
G	178	234	265	270	CF	CF	CF
H	290	360	380	405	CF	CF	CF
Weight (kg)	220	250	270	290	CF	CF	CF

NOTES:
For 3-phase actuators use "F*" instead of "F".
Mounting dimensions are for reference only, consult factory for detailed valve mounting dimensions.

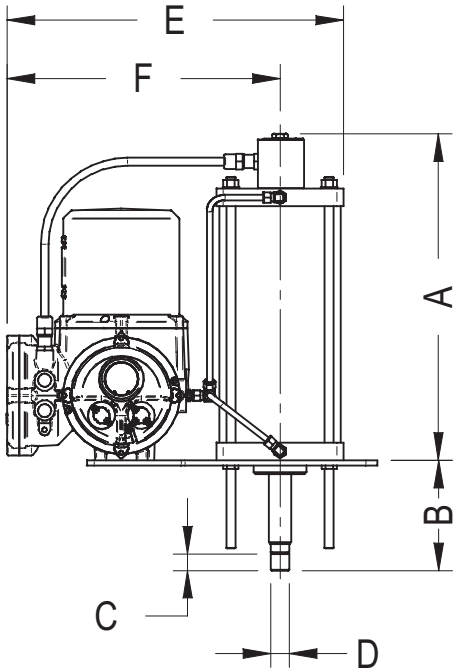

rotork®

A full listing of our worldwide sales and service network is available on our website.

Corporate Headquarters
Rotork plc
tel +44 (0)1225 733200
fax +44 (0)1225 333467
email mail@rotork.com

Fluid Systems
Fluid Power Actuators and Control Systems

Controls
Electric Actuators and Control Systems

Gears
Gearboxes and Gear Operators

Site Services
Projects, Services and Retrofit

www.rotork.com

All Rotork Fluid Systems actuators are manufactured under a third party accredited ISO9001 quality assurance programme. As we are continually developing our products, their design is subject to change without notice.

The name Rotork is a registered trademark. Rotork recognises all registered trademarks. Published and produced in the UK by Rotork Fluid Systems. POWSH0410