Fluid Power Actuators and Control Systems

rotork®
Fluid Systems

Established Leaders in Valve Actuation

The REMOTE CONTROL® Range

RC200

Compact Scotch-Yoke Actuators for Quarter-Turn Valves

Publication F211mE Issue 04/10

Rotork Actuators – Quality Controlled

Since the company was founded in 1957, Rotork has become the standard for excellence in the field of valve and damper automation for the oil, gas, power, water and waste treatment industries around the world.

As established leaders in actuation technology, we owe our success to a commitment to quality at every stage, and at every level, of Rotork's operations.

At the heart of the company is an exceptional workforce – the highly trained, forward thinking engineers, technicians, and sales support staff who each play a crucial role in maintaining Rotork's unrivaled reputation for innovation, reliability and first class after sale support.

With several fluid power factories and additional *Centres of Excellence* located around the globe, we are able to offer creative solutions and design systems for virtually any application – from subsea hydraulics to the most sophisticated yet simple fluid power control system.

Contact Rotork for your operational or safety application requirements. We will work with you from conception, to design, to manufacture, to installation, and finally to maintenance and service support.

Remote Control Range RC200 Compact Scotch-Yoke Actuators

The Rotork Fluid Systems RC200 pneumatic actuator features a modern scotch yoke mechanism that provides high start and end torque output in a very compact package. It is available in both double-acting and spring-return configurations with an optional integral manual override. Spring-return actuators feature springs that are safely contained within an epoxy coated cartridge. Pistons are guided in two places by high performance bearings which ensure proper alignment and long seal life. Adjustable travel stops are available in both directions.

RC200 actuators have the lowest weight and the smallest external dimensions of any actuator with an equivalent torque output. This yields a compact and light yet robust valve/actuator package, particularly when a manual override solution is required. Another benefit is that they have less stroke volume than comparable rack and pinion actuators, providing a significant saving in the use of compressed air.

Quality

RC200 actuators are manufactured under strict quality control in an ISO 9001:2000 / 14001:2004 environment. They comply with all standard international requirements and are CE marked according to PED and ATEX.

We use only top-quality materials in a precisely engineered and manufactured product so our actuators are very long lasting. We are proud to provide a unique three-year warranty.

Efficiency

Unlike rack & pinion designs often offered by our competitors, the RC200 with its scotch-yoke drive gives at least 50% more torque in the end positions, where most valves require it.

Reliability

Every Rotork Fluid Systems actuator is built to provide long and efficient service with a minimum of maintenance. The design, engineering and materials used in their construction ensure optimum performance even in the harshest of environments.

Inside The RC200 Actuator

Operating Pressure: 2-10 bar (30-145 psi)

Torque Output: Up to 4,400 Nm (39,000 lbf-in)

Temperature Ranges:

Standard:	-20 to +80 °C	(-4 to +175 °F)
High:	0 to +150 °C	(+32 to +300 °F)
Low:	-40 to +60 °C	(-40 to +140 °F)
Arctic:	-47 to +60 °C	(-52 to +140 °F)

Extra Corrosion Protection:

RCT: hard anodise / low friction polymer treatment.

Epoxy coating.

Offshore or other finish to meet customer specifications.

Stainless screws and drive shaft (standard for RC210 – 260).

Standards:

Solenoid valve connection:	NAMUR.
Fitting accessories:	VDI/VDE 3845, NAMUR.
Fitting to valve:	Hole pattern, centering ring ISO 5211, DIN 3337, NAMUR.
Stardrive shaft:	ISO 5211 with 90° □ and DIN 79 with 45° ◇ and NAMUR.

Operating Medium:

Air, inert gases (non-dangerous fluids, group 2 according to directive PED 97/23/EC).

RC200 actuators also available for water or oil hydraulics.

CE Marking: CE marked according to PED and ATEX.

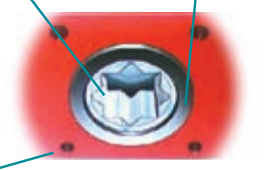

Stardrive Shaft
Tailored to international standards for square-section shafts. ISO 5211, DIN 79 and NAMUR.

Centering Ring
ISO 5211, DIN 3337, NAMUR.

Hole Pattern
International standard ISO 5211, DIN 3337, NAMUR.

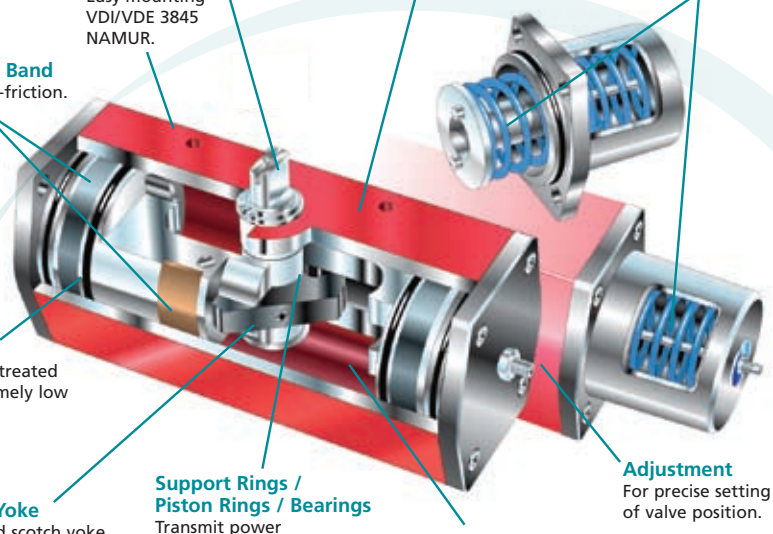

Drive Shaft
Stainless steel (RC270-280 gold chrome-plated).

Cylinder
Extruded anodised aluminium. Zero-maintenance, highly corrosion-resistant, easy to clean.

Spring Cartridge
Easy to service. Guaranteed reliability.

Accessories
Easy mounting VDI/VDE 3845 NAMUR.

Support Band
POM low-friction.

O-ring
Specially treated for extremely low friction.

Scotch Yoke
Hardened scotch yoke with canted grooves, optimum power, compact unit, minimum energy consumption.

Support Rings / Piston Rings / Bearings
Transmit power continuously and precisely.

Polished Surface Finish
Minimum friction, maximum working life, maximum precision.

Adjustment
For precise setting of valve position.

Features and Benefits

- For either on/off and modulating applications.
- Lightweight, compact design.
- Double-acting and spring-return configurations.
- Pre-tensioned springs for safety.
- High torque in the end-of-stroke positions.
- Connections and mounting according to international standards.
- High efficiency, low air consumption.
- Housing in anodised aluminium.

Note on the RC265

The RC265 size is an addition to the 200 series actuator family. This model was added as an optimum solution to a torque gap between the 260 and 270 sizes. It incorporates all the standard features of the RCI200 series except that it is available only in standard and high temperature builds. An added feature unique to the 265 model is adjustable limit stops that allow ±4° adjustment of both open and close positions. An external stop cam can be custom machined for different degrees of rotation.

M1 Manual Override

RC240-SR M1

Compact Declutchable Handwheel

The override is integrated in the endcap of the actuator and can be fitted to all RC200 series units in both double-acting and spring-return configurations. The RC M1 manual override is the optimum solution for users requiring a compact unit of minimum weight and size.

- For both double-acting and spring-return actuators.
- Lightweight yet rugged design.
- Safe, non-rotating handwheel, eliminates use of levers for manual operation.
- Valve/actuator can be locked in either open or close position.

RC280-SR M1
With control accessories

See the comparison below of an RC200 M1 with a rack and pinion actuator equipped with an intermediate gearbox providing the override function. Note that the installed height of an RC200-DA with M1 override is the same as an RC200 actuator without manual override and is significantly less than that of an actuator/gearbox solution.

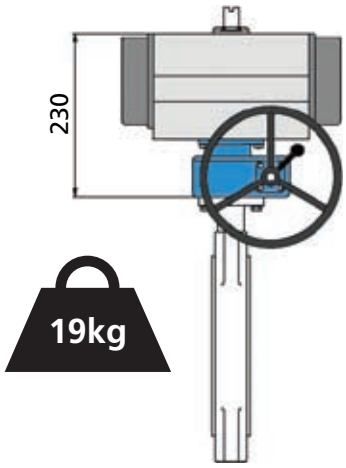

Rack & pinion actuator with intermediate gearbox

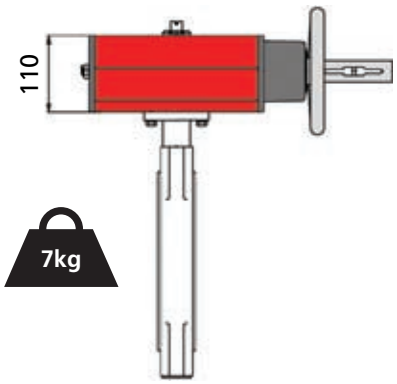

RC240-DA M1

Fitting Accessories

The Right Accessory Solutions

Valves and actuators only perform as well as the solution is engineered. With decades of experience engineering fluid power valve automation for a multitude of applications and markets, you can depend on Rotork to provide a reliable and safe automation solution to meet your requirements.

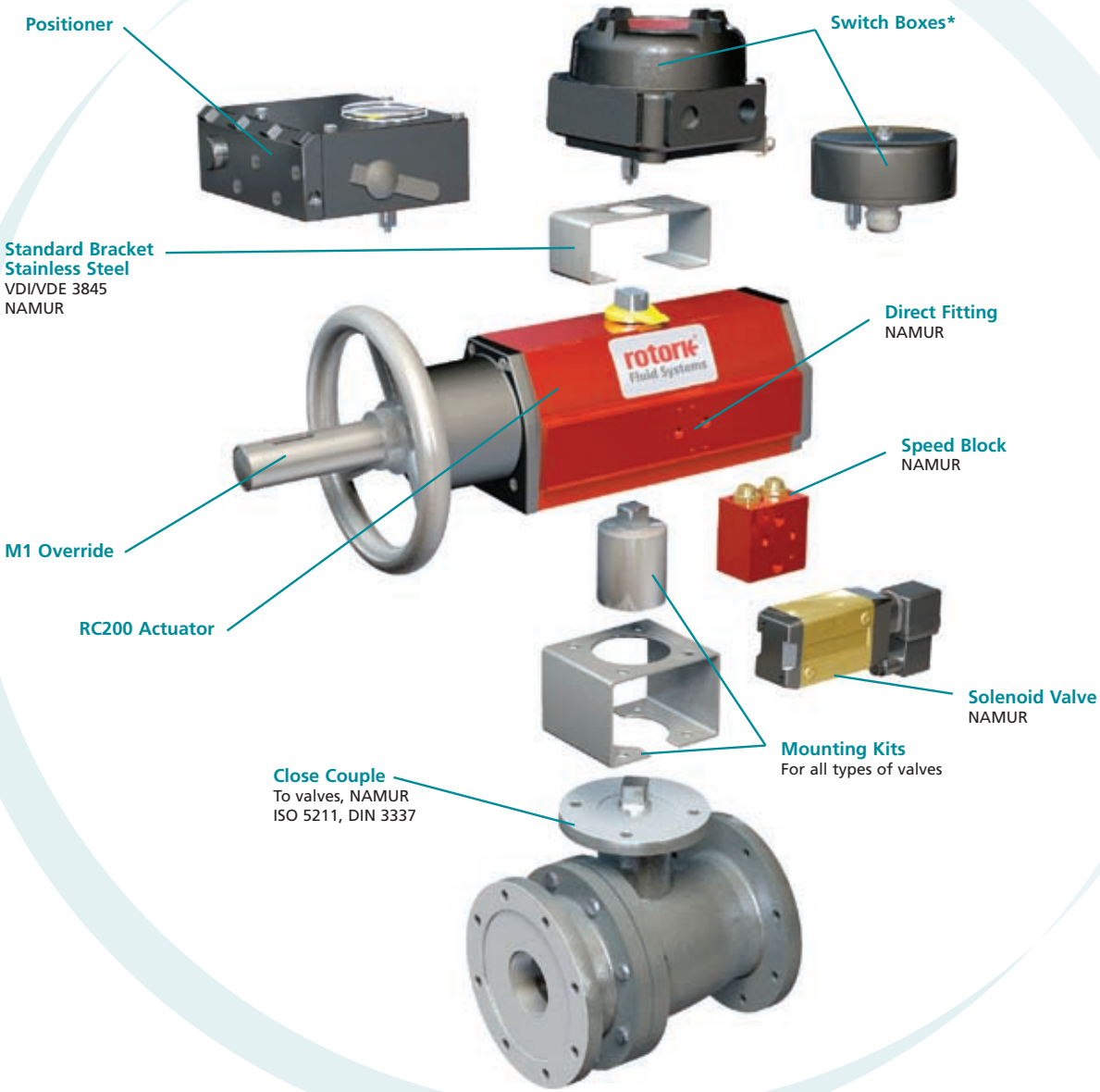

* Switch Boxes:

RC1990

Switch box, intrinsically safe IP66/67
Temp: -50 to +110 °C / -58 to +230 °F
Ex II 2 GD EEx d IIC T4, T5, T6
Temp: -55 to +80 °C / -67 to +176 °F
Ex II 2 GD EEx ib IIC T5, T6
GOST R51330 .0-99 / R51330.1-99

RCE4L

Switch box IP67
Option: Ex II 2 GD T80 / 100 °C
EEx ib IIC T6 / T5

RC200 Dimensions

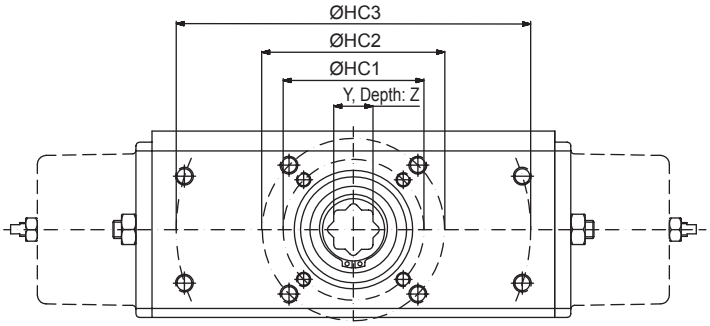

Fig. 1

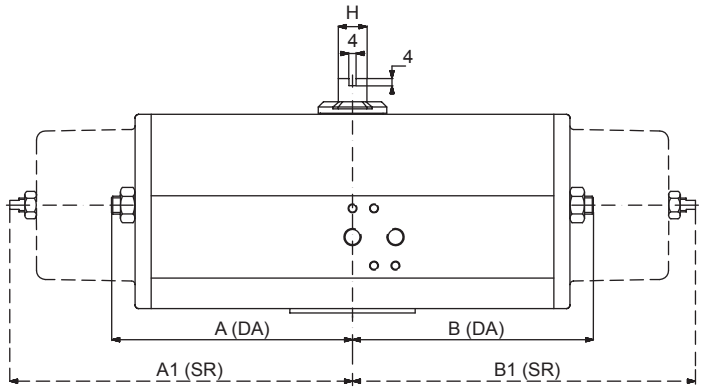

Fig. 2

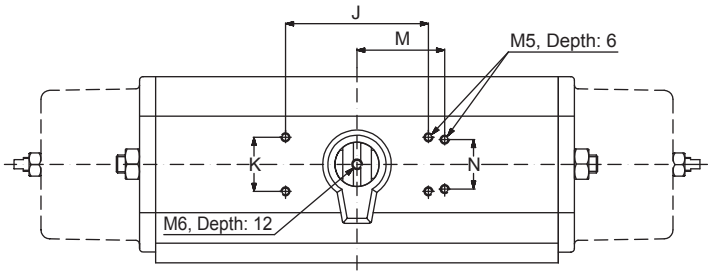

Fig. 3

	Dimensions (mm)																				Weight (kg)	
	Fig. 1					Fig. 2					Fig. 3				Fig. 4/4a							
Model	HC 1	HC 2	HC 3	Y**	Z	A	B	A1	B1	H	J	K	M	N	C	E	F	G	U*	V	DA	SR
RC210	F05	F07	-	14	19	45	98	45	150	10	35.4	35.4	40	30	32	41	75	16	35	2	1.2	1.5
RC220	F05	F07	-	14	19	98	98	150	150	10	80	30	-	-	32	41	75	16	35	2	1.6	2.2
RC230	F07	F10	-	17	30	65	135	65	200	16	80	30	-	-	49	55	110	25	55	3	3.5	4.2
RC240	F07	F10	-	22	30	135	135	200	200	16	80	30	-	-	49	55	110	25	70	3	4.9	7.0
RC250	F10	F12	-	22	37	90	190	90	285	22	80	30	-	-	69	75	155	35	70	3	9.4	12.4
RC260	F10	F12	-	27	37	190	190	285	285	22	80	30	-	-	69	75	155	35	85	3	12.5	18.5
RC265	F12	-	-	27	37	195	195	317	317	22	80	30	-	-	76	76	202	35	85	3	18.8	26.6
RC270	F14	-	170x110	36	64	145	300	145	510	40	130	30	-	-	110	110	248	60	100	4	32.0	45.0
RC280	F12	F16	234.7x97.2	46	64	300	300	510	510	40	130	30	-	-	110	110	248	60	130	5	42.0	68.0

RC200 Dimensions

RC210 to 240

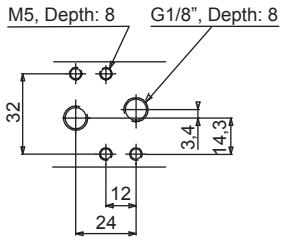

Hole pattern for solenoid valves acc. to VDI/VDE 3845, NAMUR

RC250 to 280

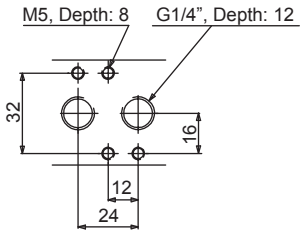

RC210 to 265

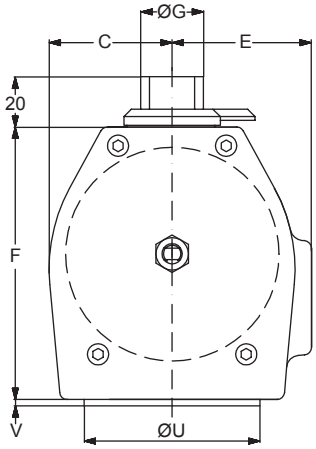

Fig. 4

SV= Mounting solenoid valves acc. to VDI/VDE 3845, NAMUR

U+V= Guide ring acc. to DIN 3337

RC270 to 280

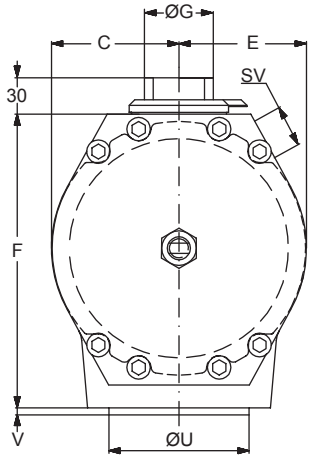

Fig. 4a

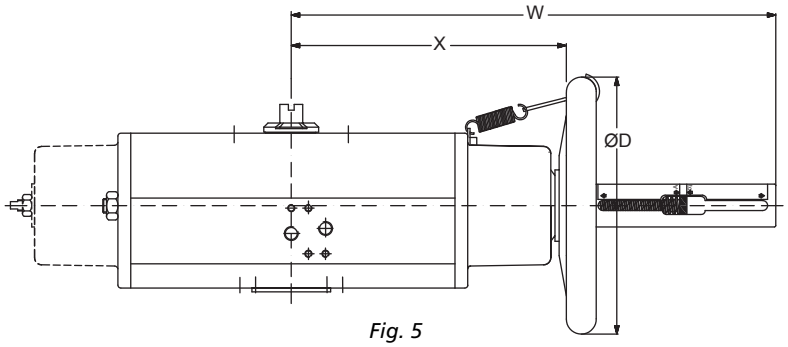

Fig. 5

	Dimensions (mm) Fig. 5			Weight w/M1 (kg)	
Model	D	X	W	DA	SR
RC210	180	145	295	2.2	2.5
RC220	180	145	295	2.7	3.2
RC230	180	190	345	4.8	5.3
RC240	180	190	345	5.8	7.1
RC250	320	295	505	13.8	15.2
RC260	320	295	505	16.3	20.2
RC265	320	370	600	24.3	31
RC270	400	515	812	47	57.7
RC280	600	490	812	55.1	80.7

U* = Guide ring for other hole circle on request.

Y** = Tolerance H9. The hole is octagonal and adapts to valve stems with squares at either 90° (ISO 5711) or 45° (DIN 3337) orientations.

Hole Dimensions (mm)			
ISO 5211	Circle Ø	Thread	Depth
F05	50	M6	11
F07	70	M8	14
F10	102	M10	17
F12	125	M12	21
F14	140	M16	25
F16	160	M20	32
170x110	-	M16	25
234.7x97.2	254	M16	25

Technical Data

Air Consumption DA

Free Air at 6 bar (dm^3)		
Model	**Anti-clockwise rotation**	**Clockwise rotation**
RC210	0.6	1.1
RC220	1.1	1.3
RC230	2.2	4
RC240	4.4	5
RC250	6.9	13
RC260	13.8	16
RC265	32	36
RC270	33	54
RC280	66	67

Air Consumption SR

Free Air at 6 bar (dm^3)	
Model	
RC210	1.1
RC220	1.3
RC230	4
RC240	5
RC250	13
RC260	16
RC265	36
RC270	54
RC280	67

Operation Times DA/SR

Time at 6 bar (sec)	
Model	**Anti-clockwise and Clockwise rotation**
RC210	<0.3
RC220	<0.3
RC230	<0.6
RC240	<0.7
RC250	<2.5
RC260	<2.5
RC265	<1.5
RC270	<5
RC280	<5

The times relate to full air flow and may increase depending on solenoid valves and the dimensions of connecting pipes.

Torque Data – Double-Acting

RC200-DA

		Position	Output Torque (Nm)*							
Model	**Function**	**0° = closed 90° = open**	**2.1 bar 30 psi**	**2.8 bar 40 psi**	**3.5 bar 50 psi**	**4.2 bar 60 psi**	**4.5 bar 65 psi**	**5.5 bar 80 psi**	**6 bar 87 psi**	**7 bar 100 psi**
RC210	Air open/close	0° 60° 90°	13 6 9	17 8 12	21 10 15	25 12 18	27 13 19	35 17 25	38 19 27	44 22 32
RC220	Air open/close	0° 60° 90°	26 13 18	34 17 24	42 21 30	51 25 36	55 27 39	70 35 50	76 38 54	88 44 63
RC230	Air open/close	0° 60° 90°	48 24 35	64 31 46	80 39 57	96 47 69	103 50 74	133 66 96	145 72 105	165 83 120
RC240	Air open/close	0° 60° 90°	98 49 70	130 65 93	162 81 117	195 97 140	209 104 150	266 133 193	290 145 210	340 170 240
RC250	Air open/close	0° 60° 90°	150 75 108	200 100 143	250 125 179	300 150 215	321 161 230	413 206 293	450 225 320	530 260 380
RC260	Air open/close	0° 60° 90°	305 150 220	407 200 293	508 250 367	610 300 440	654 321 471	834 422 596	910 460 650	1070 530 770
RC265	Air open/close	0° 60° 90°	432 203 307	576 271 409	720 338 512	864 406 614	926 435 658	1188 556 844	1296 606 921	1512 711 1075
RC270	Air open/close	0° 60° 90°	630 315 455	840 420 607	1050 525 758	1260 630 910	1350 675 975	1733 862 1247	1890 940 1360	2200 1100 1590
RC280	Air open/close	0° 60° 90°	1270 635 915	1693 847 1220	2117 1058 1525	2540 1270 1830	2721 1361 1961	3483 1742 2512	3800 1900 2740	4450 2220 3190

* Output torque +/– 5%.

Torque Data – Spring-Return (spring to close)

RC200-SR

		Position	Output Torque (Nm)*							
Model	Function	0° = closed 90° = open	2.1 bar 30 psi	2.8 bar 40 psi	3.5 bar 50 psi	4.2 bar 60 psi	4.5 bar 65 psi	5.5 bar 80 psi	6 bar 87 psi	7 bar 100 psi
RC210	Air	0° 60° 90°	7 3 4	9 4 5	12 5 6	14 6 7.5	15 6 8	19 8 10	20 9 11	24 10 13
	Spring	90° 30° 0°	6 3 4	8 4 6	10 5 7	12 6 8.5	13 6 9	16 8 11	18 9 12	21 10 14
RC220	Air	0° 60° 90°	15 6 8	19 8 10	24 10 12	29 12 15	31 13 16	39 16 20	41 18 22	48 21 26
	Spring	90° 30° 0°	13 6 9	17 8 11	21 10 14	25 12 17	27 13 18	33 16 23	37 18 25	43 21 29
RC230	Air	0° 60° 90°	27 12 15	36 15 19	45 19 24	54 23 29	58 25 31	72 31 39	78 33 41	92 39 48
	Spring	90° 30° 0°	24 12 17	31 15 22	39 19 27	47 23 33	51 25 36	63 31 44	69 33 47	81 39 55
RC240	Air	0° 60° 90°	55 24 29	73 31 39	92 39 48	110 47 58	119 51 63	147 63 77	158 68 84	185 80 98
	Spring	90° 30° 0°	48 24 33	64 31 44	80 39 55	96 47 66	104 51 71	128 63 88	140 68 96	163 80 115
RC250	Air	0° 60° 90°	85 37 45	113 49 60	142 62 75	170 74 90	184 80 97	227 99 120	245 105 130	290 125 155
	Spring	90° 30° 0°	75 37 50	100 49 67	125 62 83	150 74 100	162 80 108	200 99 133	215 105 150	255 125 175
RC260	Air	0° 60° 90°	173 75 90	230 100 120	287 125 150	345 150 180	374 162 195	460 200 240	500 215 265	580 250 310
	Spring	90° 30° 0°	153 75 105	203 100 140	254 125 175	305 150 210	330 162 227	407 200 280	440 215 305	515 250 350
RC265	Air	0° 60° 90°	280 113 125	373 150 167	467 187 208	560 225 250	607 244 271	671 280 303	730 305 330	935 360 425
	Spring	90° 30° 0°	210 103 153	280 137 203	350 171 254	420 205 305	455 222 330	560 273 407	610 330 440	695 355 525
RC270	Air	0° 60° 90°	355 155 190	473 207 253	592 258 317	710 310 380	769 336 412	947 413 507	1030 440 550	1210 520 640
	Spring	90° 30° 0°	315 155 215	420 207 287	525 258 358	630 310 430	682 336 466	840 413 573	910 440 620	1060 520 720
RC280	Air	0° 60° 90°	715 310 380	953 413 507	1192 517 633	1430 620 760	1549 672 823	1907 827 1013	2080 900 1110	2430 1050 1290
	Spring	90° 30° 0°	635 310 435	847 413 580	1058 517 725	1270 620 870	1376 672 942	1693 827 1160	1840 900 1260	2150 1050 1470

* Output torque +/– 5%.

Note: Springs adapted to air supply pressure.

Torque Data – Spring-Return (spring to open)

RC200-SRF

		Position	Output Torque (Nm)*							
Model	**Function**	**0° = closed 90° = open**	**2.1 bar 30 psi**	**2.8 bar 40 psi**	**3.5 bar 50 psi**	**4.2 bar 60 psi**	**4.5 bar 65 psi**	**5.5 bar 80 psi**	**6 bar 87 psi**	**7 bar 100 psi**
RC210	Spring	0° 60° 90°	7 2.6 3	9.6 3.6 4.3	12 4.6 5.5	15 5.5 6.6	16 6 7	20 7.5 9	21 7.8 10	25 9 11.5
	Air	90° 45° 0°	5.2 2.8 4.5	7.2 3.8 6.2	9 4.9 8	11 6 10	12 6.4 10	15 8 13	16.2 9 14.3	19 10.1 17.2
RC220	Spring	0° 60° 90°	14 5.3 6.7	20 7.2 9	25 9 12	30 11 14	33 12 15	41 15 19	43 15.5 20	50 18 23
	Air	90° 45° 0°	11 5.6 9.4	14 7.7 13	18 9.8 16	22 12 20	24 13 22	30 16 27	33 18 30	38 21.5 34.5
RC230	Spring	0° 60° 90°	27 9.8 12	37 13 16	47 17 21	57 21 25	62 23 27	77 28 34	84 30 38	93 33 40
	Air	90° 45° 0°	21 11 17	29 15 23	37 19 29	44 23 36	48 25 39	60 31 48	62 33 51.5	75 41 66
RC240	Spring	0° 60° 90°	56 20 25	77 27 34	98 35 43	118 42 52	130 46 56	160 57 70	180 65 80	190 68 82
	Air	90° 45° 0°	42 22 35	58 31 48	73 39 61	89 47 74	97 52 81	120 64 100	123 66 97	155 84 135
RC250	Spring	0° 60° 90°	84 30 37	115 42 50	145 53 64	175 64 78	195 70 85	240 87 105	265 96 120	305 112 130
	Air	90° 45° 0°	65 34 54	89 47 74	110 60 98	135 73 115	150 79 125	185 98 155	195 104 160	225 123 195
RC260	Spring	0° 60° 90°	175 63 77	240 86 105	300 110 135	370 135 160	373 135 165	500 180 220	540 195 245	620 220 280
	Air	90° 45° 0°	135 70 110	185 96 150	230 120 190	280 150 230	307 170 278	385 200 315	400 210 330	465 250 395
RC265	Spring	0° 60° 90°	251 92 113	335 123 150	419 154 188	500 175 225	536 188 241	670 230 300	730 260 325	850 300 375
	Air	90° 45° 0°	188 101 158	250 135 210	313 169 263	375 200 315	402 214 338	500 260 400	525 290 445	620 335 525
RC270	Spring	0° 60° 90°	350 130 155	480 175 210	620 2220 270	750 270 320	810 290 350	1010 365 440	1100 400 480	1250 450 550
	Air	90° 45° 0°	270 145 230	370 195 310	470 250 390	570 300 480	620 330 520	770 410 645	830 430 680	1000 540 810
RC280	Spring	0° 60° 90°	730 260 320	1000 360 440	1270 460 560	1540 550 680	1670 600 740	2080 750 920	2250 780 1000	2500 820 1100
	Air	90° 45° 0°	560 290 460	770 400 630	980 510 805	1180 620 980	1290 670 1060	1600 835 1320	1700 900 1380	2000 1100 1700

* Output torque +/– 5%.

Note: Springs adapted to air supply pressure.

rotork®
Fluid Systems

A full listing of our worldwide sales and service network is available on our website.

Corporate Headquarters
Rotork plc
tel +44 (0)1225 733200
fax +44 (0)1225 333467
email mail@rotork.com

Fluid Systems
Fluid Power Actuators and Control Systems

Controls
Electric Actuators and Control Systems

Gears
Gearboxes and Gear Operators

Site Services
Projects, Services and Retrofit

www.rotork.com

All Rotork Fluid Systems actuators are manufactured under a third party accredited ISO9001 quality assurance programme. As we are continually developing our products, their design is subject to change without notice.

The name Rotork is a registered trademark. Rotork recognises all registered trademarks. Published and produced in the UK by Rotork Fluid Systems. POWSH0410