Electric Actuators and Control Systems

rotork®
Controls

Established Leaders in Valve Actuation

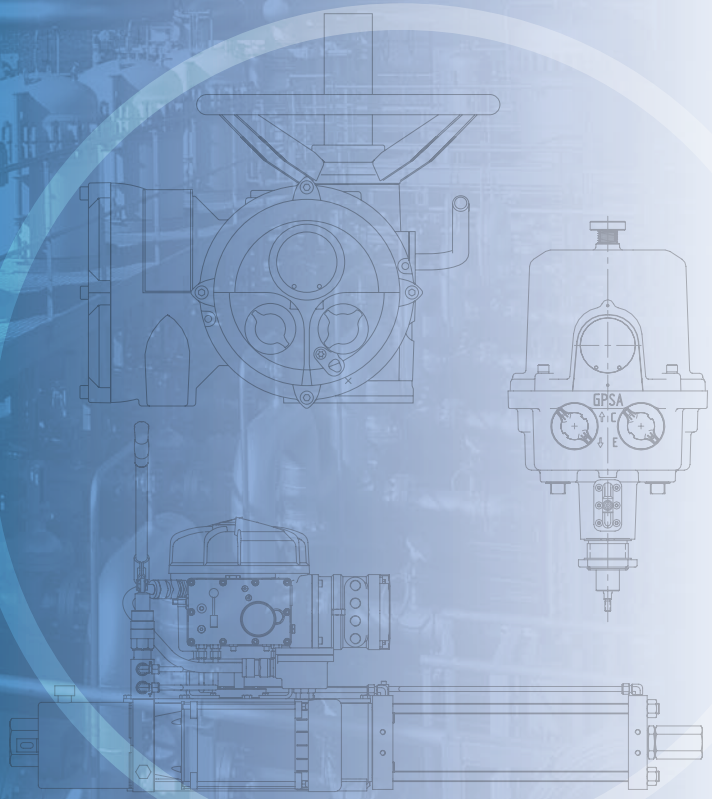

Fire Protection Solutions

Rotork Actuator Fire Proofing
Solutions in excess of 1200°C

Publication S310E Issue 05/08

rotork®

Rotork actuators have been in use all around the world for over 50 years. In this time Rotork has grown to become the leader in the valve automation industry. With manufacturing, service centres, offices and representatives throughout the world, Rotork is able to offer global service solutions to your company.

In the 50 years since the company was founded, Rotork has become a byword for excellence in the field of valve, sluice gate and damper actuation products for the oil, gas, power, water and waste treatment industries - worldwide.

We owe our success to an uncompromising focus on quality at every stage - and at every level - of Rotork's operations.

From initial site survey, specification and design, through to materials, manufacturing and testing, installation, commissioning and after-sales service we accept nothing but the best.

At the heart of the company is an exceptional workforce - the highly trained, forward-thinking engineers, technicians and support staff who each have a crucial role to play in maintaining Rotork's unrivalled reputation for innovation, reliability and first class customer support.

The Rotork family of products also includes pneumatic, hydraulic and electro-hydraulic actuators as well as a comprehensive range of gearboxes and valve accessories. Rotork's bespoke Pakscan digital control system offers market leading features whilst all our actuators offer the ability to interface with other digital control systems.

Rotork. Established leaders in valve actuation technology.

rotork® Controls

rotork® Fluid Systems

rotork® Gears

rotork® Site Services

Contents

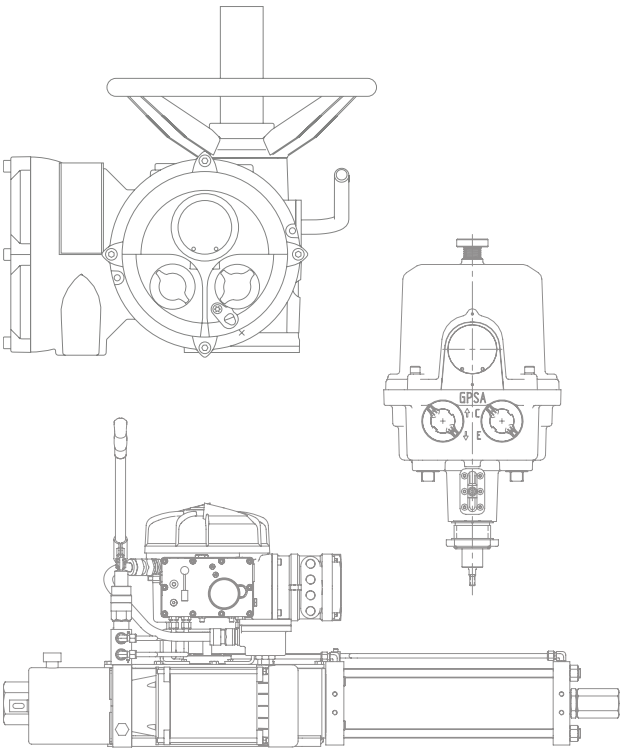

Contents

Introduction	3
Semi - Rigid Enclosure System	4
Flexible Enclosure System	5
Rigid Enclosure System	6
Rotork System-E Intumescent Coating System	7

Rotork has the experience, know-how and product range to deliver virtually any actuation solution. Rotork products have long been chosen for their reliability and performance. Whilst these proven characteristics are certain under normal operating conditions, there are conditions that not even a standard Rotork actuator can operate in - fire.

Fire and explosion is a major cause of concern to refinery, gas processing, petro-chemical and offshore installations. Danger and damage from fire can be minimised by the efficient and effective protection of the systems, which control the plant. For this reason Rotork can recommend a range of fire proofing options for it's actuators, ranging from fixed passive protection through to full fire retardant enclosures.

The fire protection systems detailed in this brochure allow the actuator to continue operating for a significant period of time in fire temperatures of over 1000°C (1832°F). Their flexibility allows them to be fitted to both new and existing actuators to ensure that the Rotork performance and operation is available at the most critical time.

It is often difficult to know where to draw the line when it comes to protecting equipment against fire. Whilst this brochure covers the protection of actuators and gearboxes, protection systems for valve top-works and cable and control entries are not manufactured by Rotork. However their function is essential to the operation of the actuator, which, even if fire protected, cannot operate without them.

Semi - Rigid Enclosure System

The semi-rigid enclosure system can provide protection for Rotork's complete actuator range against fire.

The design of the system is based upon the industry approved graph of hydrocarbon fire versus temperature curve. Equipment surface temperature constraints vary over a range of 70°C to 350°C. The semi-rigid enclosure system has been tested to UL1709 at *Warrington Fire Research Centre* where an enclosure provided protection for a Rotork actuator for a period of 30 minutes, up to 1093°C (2000°F).

A typical enclosure system consists of a steel sub-frame, enclosed in a body of 128 kg/m^3 density silicate fibre blanket encapsulated to the inner (cold) face with 400 gms/m^2 glass cloth and to the outer (hot) face with 1400 gms/m^2 weight wire reinforced cloth. Both of these cloth elements are coated with an elastometric membrane to provide environmental protection. Alternatively the enclosure may be tailored to fit directly onto the actuator body (see flexible enclosure system).

The construction of the enclosure will vary with different actuator ranges due to the actuators thermal mass, physical configuration and limiting surface temperatures.

The incorporation of special collars into the system accommodates the need for cable entries and penetrations for external hand/auto lever and handwheel operation. Thus allowing full manual operation of the actuator without the need for removing any fire insulation.

Features:

- Tested at the *Warrington Fire Research Centre*, UK.
- Individually tailored designs allow a minimum of space to be taken up.
- 30 minute protection at up to 1,093°C (2,000°F).
- Low maintenance.
- Wide temperature constraint range.
- Frame mounted or direct mounting to actuator.
- Facility for access to key actuator features – display, control knobs etc.
- Durable and weather resistant.
- Wide temperature and time capability range.
- Can be designed to contain actuator and plant equipment.
- Can be tailor made to contain gearboxes.

Flexible Enclosure System

The flexible enclosure system offers a compact fire proofing solution for both actuator and related plant equipment.

Protective jackets are widely used and are highly flexible, providing easy application and access, as well as protection to the actuator and valve. Industry applications include: Offshore oil and gas, petrochemical, power generation, marine and defence.

Features:

- Remain intact through the duration of the fire exposure.
- Blocks the flame path and transfers heat.
- Easy removal and re-installation for inspection.
- No tools or specialist training required for installation.
- Repairable in the field.
- Weather proof and robust.
- Easy to install.
- Lightweight and cost effective.
- Can be designed to contain actuator and plant equipment.
- Can be tailor made to contain gearboxes.
- Jackets can be tailored to suit varying protection levels up to 1150°C (2102°F) for 30 minutes.

Rigid Enclosure System

The rigid enclosure system can provide protection for the complete Rotork product range including actuators, controls and gearboxes.

The rigid enclosures are easy to handle yet robust enough to withstand the effects of repeated exposure to minor fires, often in a hostile environment that requires frequent in-service access. The versatility of the rigid system enables a variety of materials to be selected in order to best meet the customer specification. This ensures that the design can accommodate difficulties in location and space restrictions. Special features can be incorporated to give direct access to the protected equipment even within these constraints.

Such enclosures are constructed using high thermal performance materials encapsulated within stainless steel skins. Independent tests have been carried out on these enclosures, verifying that they pass industry standards.

Features:

- Specific designs for Rotork products.
- Designs validated by extensive testing.
- Protection against flame temperatures in excess of 1200°C (2192°F).
- Resistant to both blast and jet fires.
- Installation without specialist skills or tools.
- Retrofitable to existing units.
- Up to 120 minutes protection.
- Withstand blast overpressure.
- Easily removable panels for inspection and maintenance.
- Can be designed to contain actuator and plant equipment.
- Can be tailor made to contain gearboxes.

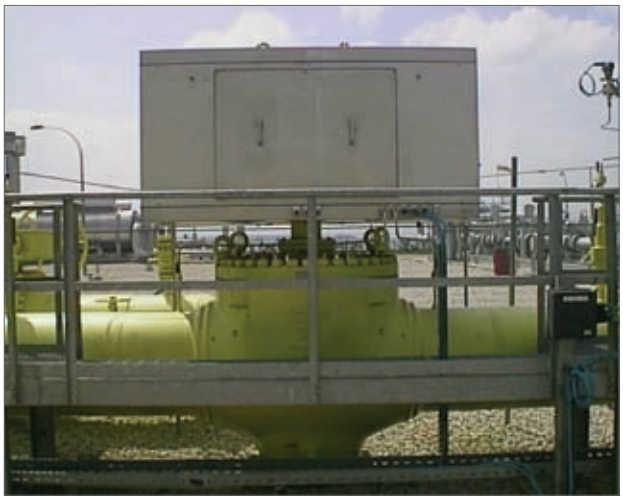

Rotork System-E Intumescent Coating System

The Rotork System-E intumescent coating system provides protection to Rotork's IQ, IQT and A range of actuators as well as the Rotork Fluid System range.

Rotork has developed System-E with one of the leading fireproofing specialists. After extensive testing we are pleased to confirm the superior properties of this system in comparison with other intumescent products.

Protection is provided by the patented coating swelling to between four and five times its original thickness, to form a lava-like char which insulates the actuator and reflects heat back into the fire.

The coating is moulded to the actuator and after the initial formation of the char, the coating remains passive until the heat penetration through the char reaches a temperature at which the passive material is again activated. The process is repeated until either the passive material is depleted or the fire is extinguished.

The intumescent coating is effective in protecting against fire through basic thermodynamic principals. The initial layer or char that forms has a very low thermal conductivity coefficient and the surface temperature of the char rises to within 100°F of the fire.

The process to change the coating from "passive" to "active" requires a substantial amount of heat energy. As this process begins to take place, cooling vapours are released and heat is absorbed away from the passive layer below. Heat rejection back to the fire is through re-radiation and convective heat transfer.

Combining all of the heat transfer characteristics results in a very effective thermal barrier. Without protection, a typical metal surface will reject approximately 20% of the heat of the fire. With an intumescent coating, in the region of 80-90% of the heat is repelled.

Features:

- Adds nothing to the fire.
- Original actuator design features available and intact.
- Exceeds ANSI/API 607 and UL 1709.
- Complete access to all component parts.
- Requires minimal space to accommodate.
- Fixed passive fire protection.
- Protection for more than 30 minutes in 1093°C (2000°F) fires.
- Permanently moulded to actuator / gearbox.
- Chemically inert.
- Segmented coatings allow trouble-free dismantling and re-assembly of actuator.
- Minimal maintenance.
- Durable and weather proof.

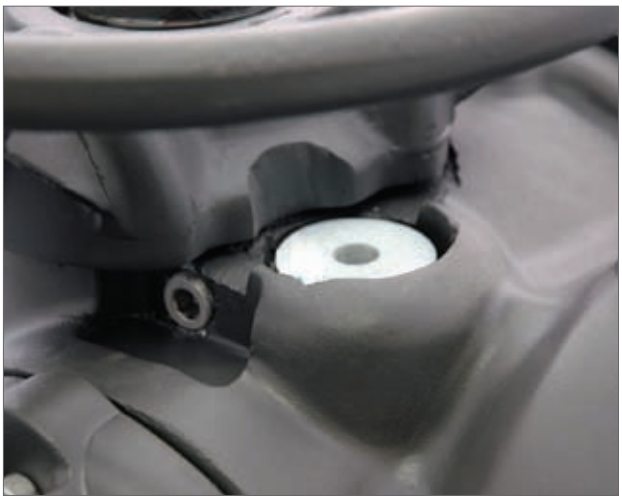

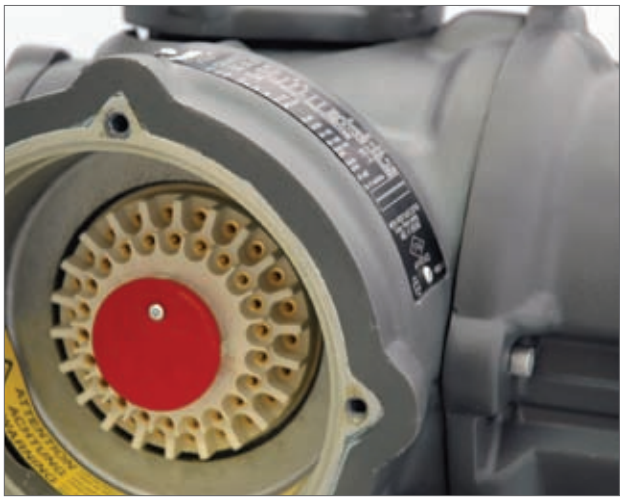

Rotork Controls Inc, Rochester, USA

Rotork Controls Ltd, Bath, UK

As part of a process of on-going product development, Rotork reserves the right to amend and change specifications without prior notice. Published data may be subject to change.

For the very latest version release, visit our website at www.rotork.com

The name Rotork is a registered trademark. Rotork recognises all registered trademarks.
Published and produced in the UK by Rotork Controls Limited. POWSH0508

rotork®
Controls

UK head office
Rotork Controls Limited
tel Bath 01225 733200
fax 01225 333467
email mail@rotork.co.uk

USA head office
Rotork Controls Inc
tel Rochester (585) 247 2304
fax (585) 247 2308
email info@rotork.com

Controls
Electric Actuators and Control Systems

Fluid Systems
Fluid Power Actuators and Control Systems

Gears
Gearboxes and Gear Operators

Site Services
Projects, Services and Retrofit

A full listing of our worldwide sales and service network is available on our website at:

www.rotork.com