rotork®
Fluid Systems

Established Leaders in Valve Actuation

HPG RANGE

DIRECT HIGH-PRESSURE GAS SCOTCH YOKE ACTUATORS

INSTALLATION AND MAINTENANCE MANUAL

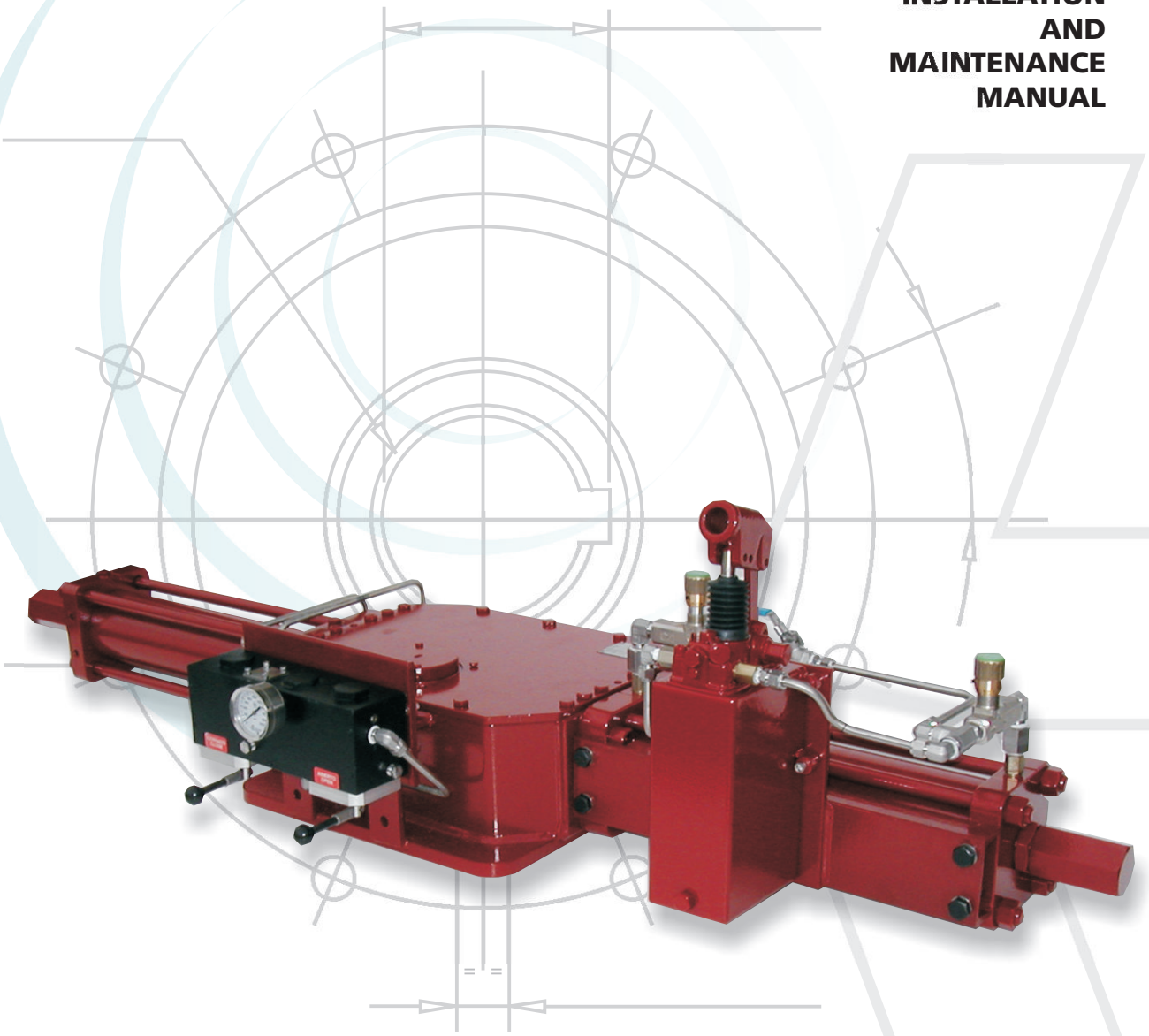

Publication F330E
Date of issue 04/08

rotork®
Fluid Systems

Established Leaders in Valve Actuation

HPG RANGE

DIRECT HIGH-PRESSURE GAS SCOTCH YOKE ACTUATORS

INSTALLATION AND MAINTENANCE MANUAL

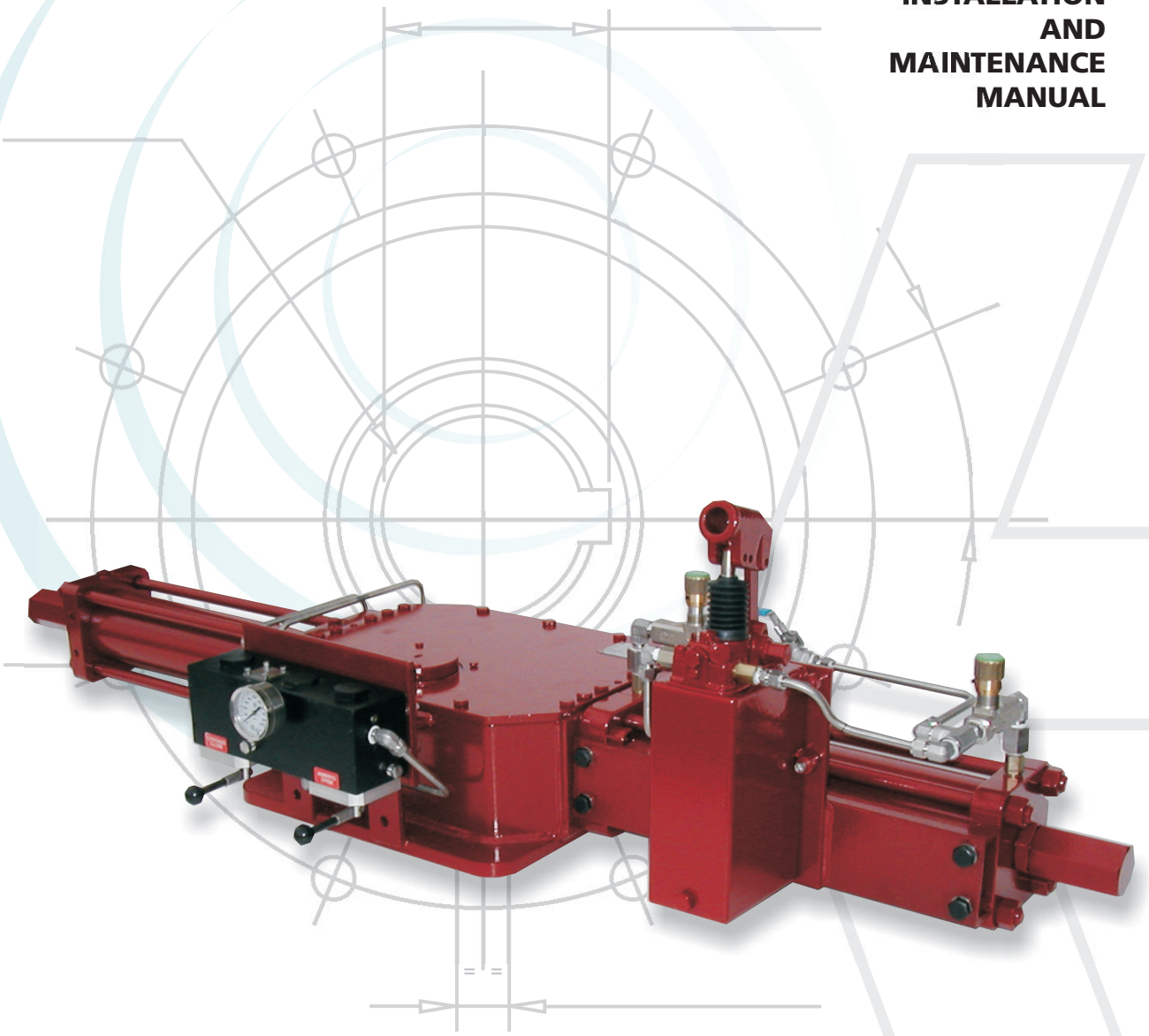

Publication F330E
Date of issue 04/08

TABLE OF CONTENTS

SECTION	CONTENT	PAGE
1	Introduction	3
2	Installation	3
3	Maintenance	5
4	Grease and Hydraulic Oil Specifications	6
5	Cylinder Seal Replacement	7
6	Fault Detection	8
7	Actuator Drawing / Parts List	9
Appendix		
A	Stop Bolt Adjustment	10
B	MB1 Switchbox Setting Procedure	11

Publication F330E
Date of issue 04/08

1.0 Introduction

This manual is produced to enable a competent user to install, operate, adjust, inspect, and maintain Rotork Fluid Systems HPG range actuators. Users are responsible to follow the instructions in this manual as well as any additional documentation that has been supplied regarding the actuator or accessories supplied by Rotork Fluid Systems. Should further information or guidance relating to the safe use of HPG range actuators be required, it will be provided on request. Users are also responsible to be familiar with and follow any relevant legislation or statutory provisions regarding health and safety.

It is the users responsibility to ensure that the equipment is operated in a safe manner and that any personnel working with or on the equipment are properly trained for the work they are performing and are also aware of their responsibilities relating to health and safety in the workplace. It is extremely important that precautions are taken to avoid spark or static discharge in any areas of potentially explosive atmosphere.

All Rotork Fluid Systems actuators are tested prior to despatch. Job specific documentation is shipped with the actuator. Test certificates and replacement documentation are available upon request. The latest general information regarding any Rotork product is available on our website www.rotork.com.

INSTALLATION

2.0 Installation

2.1 Electrical Considerations

2.1.1 Any electrical connections required are the responsibility of the user. Connection documentation is supplied with the actuator. Refer to the applicable wiring diagram to identify functions of terminals. Verify that the electrical supply characteristics are compatible with the supplied actuator control components.

2.1.2 Only appropriate certified explosion-proof entry reducers, glands or conduit may be used if the unit is installed in a hazardous area. Remove any plastic transit plugs. Make cable entries appropriate to the cable type and size. Ensure that threaded adaptors, cable glands or conduit are tight and fully waterproof. Seal unused cable entries with a steel or brass plug. In hazardous areas an appropriately certified threaded blanking plug must be used.

2.1.3 Access to live electrical conductors is forbidden in hazardous areas unless done under a special permit to work. Otherwise, all power should be isolated and the unit moved to a non-hazardous area for repair or attention.

2.1.4 The actuator and control components must be protected from electrical spikes, surges, and lightning strikes as well as magnetic or electro-magnetic fields. This is the responsibility of the user.

2.2 Motive Power Supply (pneumatic, hydraulic)

2.2.1 Ensure that the actuator will not be exposed to pressure in excess to the maximum rating as indicated on the nameplate.

2.2.2 Verify that medium composition (e.g., filtration, hydration) correspond to that for with the actuator was manufactured. Rotork Fluid System must be contacted to verify compatibility of any proposed changes to supply medium.

2.2.3 Ensure that throughout the installation that there are no leaks of a potentially explosive supply medium (e.g., natural gas).

Note: Depending upon control circuit design, pneumatically powered actuators may exhaust the power supply gas to atmosphere in the course of normal operation. This may present an unacceptable hazard in some applications. Consult Rotork Fluid Systems if in doubt as to the suitability of the equipment supplied for your application.

2.3 Maximum Allowable Temperature

2.3.1 The maximum temperature allowable for standard build actuators is 100°C (212°F).Other maximum temperature build options are available. It is the responsibility of the user to ensure that the maximum allowable temperature as indicated on the nameplate is not exceeded and also, in the case of sites where a potentially explosive atmosphere may exist, that the surface temperature of the actuator does not exceed the ignition point of the potentially explosive atmosphere.

2.3.2 Be aware that the temperature of the contents of the valve/pipeline as well as that of the power supply gas will affect actuator temperature. A build up of dust or dirt on the actuator can inhibit cooling and contribute to increased surface temperatures. The user should plan and provide for a periodic cleaning/maintenance program that will maintain the installation environment per the guidelines set forth in EN 1127-1 par 6.4.2.

2.4 Operating Environment

2.4.1 The user must ensure that the operating environment and any materials surrounding the unit cannot lead to a reduction in the safe use of, or the protection afforded by the actuator. Where appropriate, the user must ensure the actuator is suitably protected against its operating environment including, but not limited to, lightning strikes, vibration sources and vehicular movement.

2.4.2 If the unit has a nameplate indicating that it is suitable for installation in potentially explosive atmosphere (hazardous area), it must not be installed in a hazardous area that is not compatible with the gas groups and temperature class defined on the nameplate.

2.5 Mechanical Considerations

2.5.1 It is recommended that before lifting an actuator onto a valve, great care is taken to ascertain the position of the valve and orientate the actuator accordingly.

2.5.2 Rotork actuators can be mounted on valves in almost any desired position. It is usual however to align the centerline of the cylinder to the centerline of the associated pipe work.

Note: Certain accessory and control components e.g., filter drains, hydraulic reservoirs; require proper orientation with respect to gravity to function properly. Contact Rotork Fluid Systems if in doubt.

2.5.3 Ensure all fasteners are adequately tighten to avoid loosening during the course of operation, taking into account vibration induced by the dynamics of the pipeline.

2.54 All tubing used to provide pneumatic/hydraulic power to the actuator must be free from contaminants and debris. Ensure tubing runs are adequately fastened and supported to minimise repetitive stress induced by any vibration induced by the dynamics of the pipeline.

2.5.5 When the actuator has been bolted to the flange or adapter, the position of the stop bolts should be checked to ensure full opening and closing of the valve. If these end of travel positions are not correct, the stop bolts may be adjusted by first loosening the fixing nut and then screwing the bolts in or out until desired end position is obtained. Stroke the yoke away from the stop bolt when adjusting, then return it to check position. When the correct positioning is obtained, re-tighten the fixing nut.

2.5.6 Certain valves incorporate their own stops. In these cases it is recommended that the actuator stop bolt positions coincide with the valve stop positions.

2.5.7 Ensure there are no leaks from any pneumatic or hydraulic connections. Tighten as required.

2.5.8 Once in position, the actuator should operate the valve with a smooth continuous action. If uneven operation occurs, the pneumatic/hydraulic power supply should be checked for correct pressure and volume flow. Flow may be restricted by undersize pipe or fittings. These could throttle the flow thus reducing the pressure and volume at the actuator and causing intermittent motion. Further fault detection procedures are outlined in Section 6.

3.0 Maintenance

3.1 Rotork actuators are designed to work for long periods of time in the most severe conditions. However, a preventative approach to maintenance helps prevent costly down time and can actually reduce the cost of ownership. Rotork can provide an actuator maintenance contract tailored to meet each customer's individual requirements.

3.2 Any personnel working with or on the equipment must be properly trained for the work they are performing and be aware of their responsibilities relating to health and safety in the workplace.

3.3 No inspection or repair should be undertaken unless it conforms to any applicable hazardous area certification requirements. Under no circumstances should any modification or alteration be carried out on the unit as this could invalidate the certification.

3.4 Before performing maintenance, the actuator should be isolated from remote control signals and the pneumatic/hydraulic power supply. The system should be then be relieved of any internal pressure prior to disassembly.

3.5 Improper operation, adjustment or maintenance of the actuator and controls may, depending on the application, release potentially explosive gas and or dangerous liquids.

3.6 After maintenance has been performed and re-assembly completed, follow the inspection guidelines as outlined section 3.6.

3.7 Periodic Inspection

3.7.1 Ensure that the actuator correctly operates the valve within the required cycle time. The actuator should be cycled several times with all the existing controls e.g., remote control, local control and manual override; particularly if the actuator is not frequently operated.

3.6.2 Verify that the power gas supply pressure value is within the required range.

3.7.3 Visually inspect external components of the actuator for physical damage.

3.7.4 Check pneumatic/hydraulic connections for leakage. Tighten pipe fittings as required.

3.7.5 Remove dust and dirt build-up from all actuator surfaces. They can inhibit cooling thus raising the temperature of the actuator above the maximum allowable limit.

3.7.6 Inspect actuator paint work for damaged to ensure continued corrosion protection. Touch-up as required to applicable paint specification.

4.0 Grease and Hydraulic Oil Specifications

4.1 Grease Specification

Manufacturer:	Mobil
Trade name:	Mobiltemp 78
Colour:	Gray/black
Soap type:	Inorganic
Oil type:	Mineral
Consistency (NLGI GRADE)-ASTM D217:	1
Worked penetration at 25°C-ASTM D217:	295/325 dmm
Dropping point - ASTM D2265	260°C
Viscosity of base oil at 40°C-ASTM D445:	485 cSt
Viscosity of base oil at 100°C-ASTM D445:	32 cSt

QUANTITY OF GREASE IN HOUSING	
CENTRE BODY SIZE	QTY (kg/lb)
065, 085, 100	0.3/0.66
130	0.4/0.88
160, 161, 200, 201	0.5/1.10
270, 271	0.8/1.76
350	1.2/2.64

Note: This is the standard grease specification for Rotork Fluid Systems actuators. If an alternative was specified and/or supplied, it is noted in job specific documentation, which is available upon request.

4.2 Hydraulic Oil Specification

Manufacturer:	Mobil
Trade name:	DTE 11
Viscosity at 40°C:	16.5 cSt
Viscosity at 100°C:	4.2 cSt
Viscosity index ASTM:	168
ISO Grade:	16
Pour point:	-42°C
Specific weight at 15°C:	0.85 kg/dm^3
Equivalent to:	Statoil - Hydraway HVX-A15

Note: This is the standard hydraulic oil specification for Rotork Fluid Systems actuators. If an alternative was specified and/or supplied, it is noted in job specific documentation, which is available upon request.

5.0 Cylinder Seal Replacement

5.1 Disassembly

5.1.1 Disconnect hydraulic and electrical supply connections. For spring return actuators, ensure that the actuator is in the failed position (i.e., at end of spring stroke).

5.1.2 Remove stop bolt cap nut (27).

5.1.3 Loosen stop bolt fixing nut (25) and remove stop bolt (26).

5.1.4 Remove tie rod nuts (29) from the tie rods (20).

5.1.5 Remove bottom flange (24).

5.1.6 Remove cylinder tube (22).

5.1.7 Remove housing cover bolts (16), housing cover (15) and housing cover gasket (14).

5.1.8 Remove piston rod (21) by unscrewing it from the guide block (4).

5.1.9 Remove flange retaining bolts (13) and remove head flange (18).

5.1.10 Remove head flange and bottom flange o-rings (19).

5.1.11 Remove piston seal (33) sliding rings (30), flange gasket (17) and shaft seal(31).

5.1.12 Clean all sealing surfaces.

5.1.13 Coat new o-rings, seals and gaskets with grease.

5.2 Assembly

5.2.1 To reassemble the actuator, follow the disassembly procedure in reverse order.

5.2.2 Reconnect hydraulic supply lines to the actuator.

5.2.3 Cycle the actuator several times. Movement should be smooth and continuous. If not, refer to Section 6, Fault Detection.

RECOMMENDED TIGHTENING TORQUE		
BOLT SIZE	NM	FT. LBS
M6	8.5	6
M8	20	15
M10	40	30
M12	55	40
M14	110	81
M16	220	162
M20	430	317
M22	425	313
M24	585	431
M27	785	579
M30	1,250	921
M33	1,400	1,030
M36	1,750	1,290

6.0 Fault Detection

In the unlikely event of a fault developing, the following Fault Location Table is provided to assist the maintenance technician. This table is designed to cover as wide a range of Rotork Fluid Systems actuators as possible. Reference to equipment not supplied should be ignored.

SYMPTOM	CAUSE	REMEDY
6.1 Erratic movement	6.1.1 Irregular supply of operating medium.	6.1.1.1 Check operating medium for consistent supply pressure and correct as necessary.
	6.1.2 Inadequate lubrication.	6.1.2.1 Dismantle, re-lubricate and reassemble.
	6.1.3 Worn parts.	6.1.3.1 Dismantle. Visually inspect for significant wear. Actuator replacement may be required.
	6.1.4 Defective valve.	6.1.4.1 Consult the valve manufacturer's documentation.
6.2 Short stroke	6.2.1 Incorrectly set stops (valve and /or actuator).	6.2.1.1 Check the position of the travel stops and readjust as necessary.
	6.2.2 Hardened grease.	6.2.2.1 Dismantle, remove any hard grease, re-lubricate and reassemble.
	6.2.3 Debris left in the cylinder or housing during maintenance.	6.2.3.1 Disassemble cylinder assembly to remove debris. Reassemble cylinder assemble as necessary.
	6.2.4 Defective valve.	6.2.4.1 Consult the valve manufacturer's documentation.
6.3 Apparent lack of power	6.3.1 Inadequate supply pressure.	6.3.1.1 Ensure supply pressure is above the minimum operating pressure of the actuator and that output torque produced at supply pressure exceeds valve torque demand.
	6.3.2 Incorrect speed control settings.	6.3.2.1 Adjust speed controls to increase flow.
	6.3.3 Exhaust port blocked.	6.3.3.1 Remove and clean the exhaust port silencers and replace.
	6.3.4 Pipe work blocked, crushed or leaking.	6.3.4.1 Examine the pipe work for blockages, crushed pipe or leakage. Clear or replace as necessary.
	6.3.5 Defective controls.	6.3.5.1 Examine the controls, refurbish or renew as necessary. Refer to component manufacturer's documentation.
	6.3.6 Defective piston seal.	6.3.6.1 Dismantle the cylinder assembly, remove the defective piston seal. Fit new seal and reassemble.
	6.3.7 Defective rod seal.	6.3.7.1 Dismantle the cylinder assembly, remove the defective rod seal. Fit new seal and reassemble.
	6.3.8 High valve torque or valve seized.	6.3.8.1 Consult the valve manufacturers documentation.

CENTRE BODY ASSEMBLY			
ITEM	DESCRIPTION	MATERIAL	QTY
1	Centre Body	Carbon Steel or Ductile Iron	1
2	Guide Bar	Alloy Steel - Chrome Plated	1
3	Safety Valve	Brass/Stainless Steel	1
4	Guide Block	Carbon Steel	1
5	Yoke	Carbon Steel or Ductile Iron	1
6	Bushing	Steel/Bronze/PTFE	2
● 7	O-ring	NBR	2
8	Upper Bushing	Bronze	1
9	Lower Bushing	Bronze	1
10	Sliding Block	Bronze	2
11	Bar Pin	Alloy Steel	1
12	Retaining Ring	Spring Steel	2
13	Flange Retaining Bolt	Carbon Steel	■
● 14	Gasket	Vaporflex/SA	1
15	Cover	Carbon Steel	1
16	Cover Mounting Bolt	Carbon Steel	■
● 17	Flange Gasket	Vaporflex/SA	2

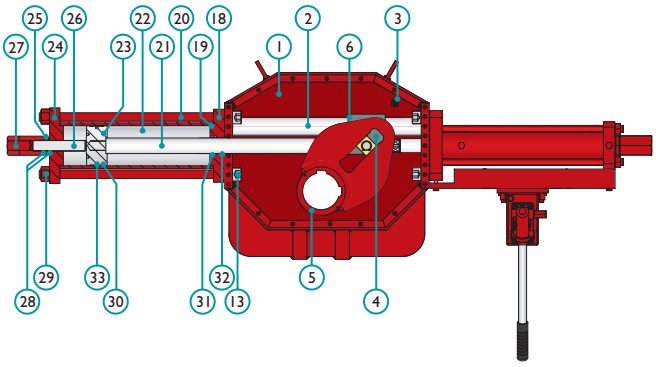

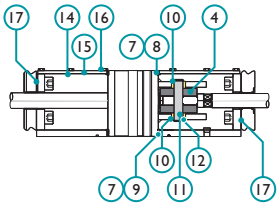

Centre body cross-section

HYDRAULIC CYLINDER ASSEMBLY			
ITEM	DESCRIPTION	MATERIAL	QTY
18	Head Flange	Carbon Steel	1
▲ 19	Flange O-ring	NBR	2
20	Tie Rod	Alloy Steel	■
21	Piston Rod	Carbon Steel - Chrome Plated	1
22	Cylinder Tube	Carbon Steel	1
23	Piston	Carbon Steel	1
24	Bottom Flange	Carbon Steel	1
25	Stop Bolt Fixing Nut	Carbon Steel	1
26	Stop Bolt	Alloy Steel	1
27	Cap Nut	Carbon Steel	1
28	Seal Washer	Carbon Steel/NBR	2
29	Tie Rod Nut	Carbon Steel	■
30	Sliding Ring	PTFE/Bronze	■
▲ 31	Seal	NBR/PTFE/Bronze	2
32	Bushing	Steel/PTFE/Bronze	1
▲ 33	Seal	NBR/PTFE/Bronze	1

SPRING CARTRIDGE ASSEMBLY (optional)			
ITEM	DESCRIPTION	MATERIAL	QTY
34	Head Flange	Carbon Steel	1
35	Driving Flange	Carbon Steel	1
36	Connecting Rod	Carbon Steel - Chrome Plated	1
37	Bushing	Steel/Bronze/PTFE	1
38	Spring Canister	Carbon Steel	1
39	Spring	Spring Steel	1
40	Stop Bolt	Carbon Steel	2
41	Bottom Flange	Carbon Steel	1
42	Protection Plug	Carbon Steel	1
43	O-ring	NBR	1
44	Bushing	Steel/PTFE/Bronze	1

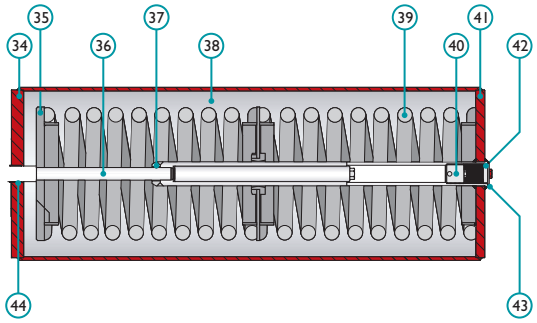

■ Quantity varies with size of the actuator.
● Included in housing seal kit.
▲ Included in hydraulic cylinder seal kit.

Note: A manually operated hydraulic override is standard on HPG Range.
See Publication F132E for override Operation and Maintenance.

1.0 Overview

All RFS G Range actuators (ie., GP, GH, GO and HPG) incorporate adjustable stops to limit the degree of travel in both directions. Steps are outlined below for adjustment of the three stop configurations: pneumatic/hydraulic cylinder, spring cartridge and, jackscrew.

Actuators may be damaged by improper adjustment procedure. Strictly follow the instructions as outlined below with particular attention to the warnings is steps 1.1.3, 1.2.2, 1.3 and 1.3.3.

1.1 Pneumatic/Hydraulic Cylinder (See figure 1)

1.1.1 Remove stop bolt cover.

1.1.2 Loosen stop nut.

1.1.3 Apply pressure to outboard side of cylinder to remove load from stop bolt. Failure to do so may result in damage to the actuator!

1.1.4 Adjust stop bolt in/out as desired.

1.1.5 Remove pressure from cylinder to verify stop position.

1.1.6 Repeat steps 1.1.3 - 1.1.5 as necessary to achieve desired degree of travel.

1.1.7 Once desired position is achieved, tighten stop nut, ensuring sealing washer is properly centered on the shaft and fitted in the machined recess in the flange.

1.1.7 Re-install stop cover, ensuring sealing washer is properly centered on the shaft and fitted in the machined recess in the stop cover.

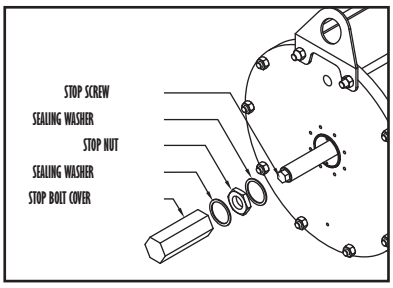

figure 1

1.2 Spring Canister (See figure 2)

1.2.1 Remove the spring stop cap.

1.2.2 Depressurize the cylinder to allow the spring to relax. Failure to do so may result in damage to the actuator!

1.2.3 Adjust the spring stop in/out as desired.

1.2.4 Pressurize to outboard side of power cylinder sufficiently to induce a complete stroke of the actuator and then check the stop position.

1.2.5 Repeat steps 1.2.2 - 1.2.4 as necessary to achieve desired degree of travel.

1.2.6 Once the desired position is achieved, replace spring stop cap.

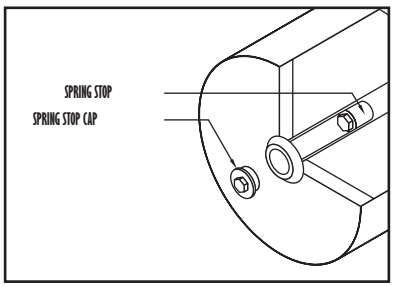

figure 2

1.3 Jackscrew (See figure 3)

Note: The jackscrew is not designed to function as a travel stop. Stroking the actuator against the jackscrew may damage it.

1.3.1 Remove stop bolt cover.

1.3.2 Loosen stop nut.

1.3.3 Turn jackscrew fully in to compress spring and remove any load from the stop. Failure to do so may result in damage to the actuator!

On fail close actuators, this is done by turning the handwheel anti-clockwise.

On fail open actuators, this is done by turning the handwheel clockwise.

1.3.4 Adjust stop bolt in/out as desired.

1.3.5 Back jackscrew out (opposite direction of as determined in 1.3.3) until seated against stop screw to verify stop position.

1.3.6 Repeat steps 1.3.3 - 1.3.5 as necessary to achieve desired degree of travel.

1.3.7 Once desired position is achieved, tighten stop nut, ensuring sealing washer is properly centered on the shaft and fitted in the machined recess.

1.3.8 Re-install stop cover, ensuring sealing washer is properly centered on the shaft and fitted in the machined recess in the stop cover.

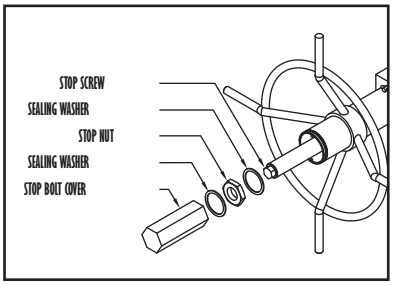

figure 3

1.0 MB1 Limit Switch Adjustment

The MB1 is a Rotork Fluid Systems designed and manufactured switch enclosure suitable for use in harsh and/or hazardous environments. It is available with either dry contact or proximity type switches. Consult the applicable job specific wiring diagram for termination details. Contact Rotork Fluid Systems switch options and certification details.

1.1 Setting Dry Contact Switches

1.1.1 Loosen the four screws (1) and remove the cover (2).
1.1.2 Setting the CLOSE limit switch.

1.1.2.1 Place the actuator/valve in the fully CLOSED position.

1.1.2.2 Locate the proper switch cam.

1.1.2.3 Loosen the setscrew (5) and rotate the cam (4) until the switch operates. Tighten the setscrew. The switch is now set.

1.1.3 Setting the OPEN limit switch.

1.1.3.1 Place the actuator/valve in the fully OPEN position.

1.1.3.2 Locate the proper switch cam.
Loosen the setscrew (5) and rotate the cam (4) until the switch operates. Tighten the setscrew. The switch is now set.

1.1.4 Replace the cover (2) and tighten the four screws (1).

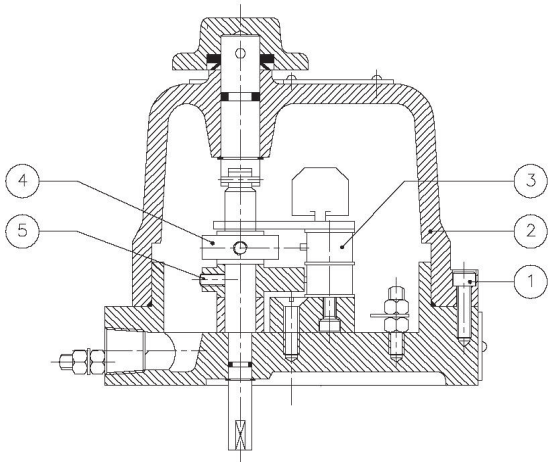

1.2 Setting Proximity Type Contact Switches

1.2.1 Loosen the four screws (1) and remove the cover (2).

1.2.2 Setting the CLOSE limit switch.

1.2.2.1 Place the actuator/valve in the fully CLOSED position.

1.2.2.2 Locate the proper switch cam.

1.2.2.3 Loosen the setscrew (5) and rotate the cam (4) until it is on the same axis as the switch and re-tighten the setscrews.

1.2.2.4 Loosen the fixing nuts on the switch. Position the switch the proper distance from the cam to activate the switch. Re-tighten the fixing and lock nuts. The switch is now set.

1.2.3 Setting the OPEN limit switch.

1.2.3.1 Place the actuator/valve in the fully OPEN position.

1.2.3.2 Locate the proper switch cam.

1.2.3.3 Loosen the setscrew (5) and rotate the cam (4) until it is on the same axis as the switch and re-tighten the setscrew.

1.2.3.4 Loosen fixing nuts on the switch. Position the switch the proper distance from the cam to activate the switch. Re-tighten the fixing and lock nuts.The switch is now set.

1.2.4 Replace the cover (2) and tighten the four screws (1).

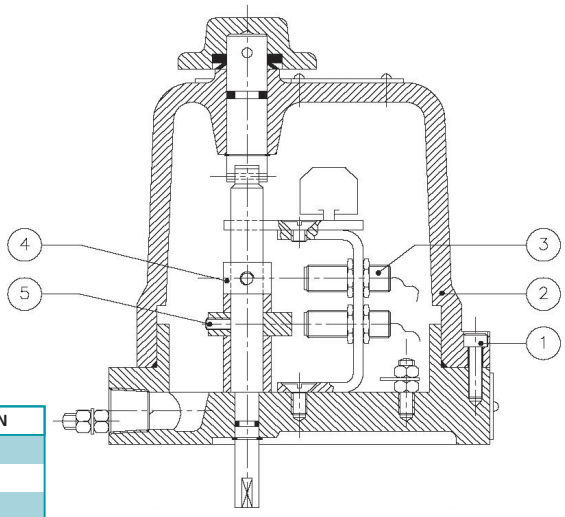

ITEM	DESCRIPTION
1	Screw
2	Cover
3	Microswitch
4	Cam
5	Dowel

Manufacturing Centres

Germany
Melle
Tel: +49 (0)5422 9414-0
Fax: +49 (0)5422 9414-10
sales@rfs-pci.de

Italy
Tassignano - Lucca
Tel: +39 0583 93061
Fax: +39 0583 934612
fluid@fluidsystem.com

Sweden
Falun
Tel: +46 (0)23-587 00
Fax: +46 (0)23-587 45
Email:
info@remotecontrol.se

United States
Rochester, New York
Tel: +1 585 247 2304
Fax: +1 585 247 2308
rfsinfo@rotork.com

Centres of Excellence

Australia
Bayswater, Victoria
Tel: +61 (0) 3 9729 8882
Fax: +61 (0) 3 9729 8884
sales@rfsaustralia.com

Canada
Calgary, Alberta
Tel: +1 403 569 9455
Fax: +1 403 569 9414
info@rotork.ca

Singapore
Tel: + 65 6457 1233
Fax: + 65 6457 6011
mail@rotork.com.sg

Spain
Bilbao
Tel: + 34 94 676 6011
Fax: + 34 94 676 6018
rotork@rotork.es

United Kingdom
Bramley, Leeds
Tel: +44 (0)113 236 3312
Fax: +44 (0)113 205 7266
sales@rotorkfluidsystem.co.uk

United States
Houston, Texas
Tel: +1 713 856 5640
Fax: +1 713 856 8127
rfsinfo@rotork.com

United States
Petaluma, California
Tel: +1 707 769 4880
Fax: +1 707 769 4888
rfsinfo@rotork.com

United States
North Kingstown, Rhode Island
Tel: +1 401 294 1400
Fax: +1 401 294 3388
Email: sales@remotecontrol.us

All Rotork Fluid Systems actuators are manufactured under a third party accredited ISO 9001:2000 quality assurance programme.

Published and produced by Rotork Fluid Systems. Rotork recognises all registered trademarks.

As we are continually developing our products, their design is subject to change without notice. RFSMH0408

rotork®

Latest information is available on

www.rotork.com