FLOWSERVE

Limitorque Actuation Systems

140-11000
July 2003

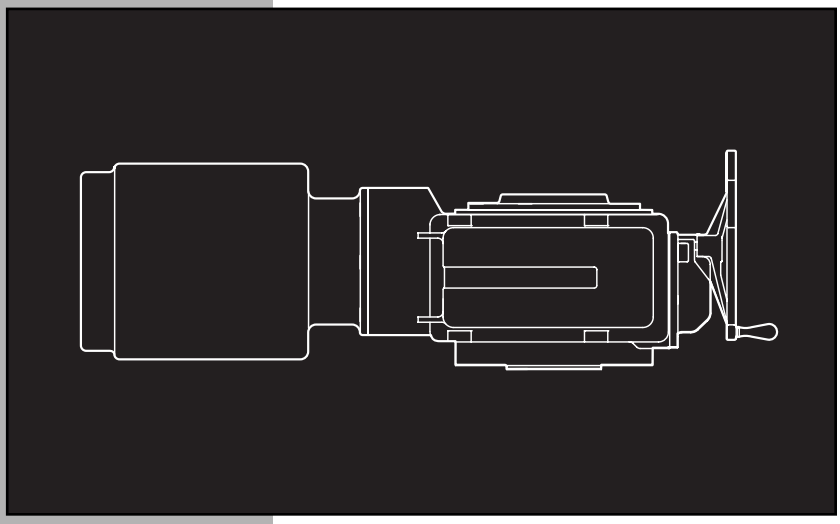

Limitorque®

SMB Series/SB Series
Installation and Maintenance

SMB/SB Series Installation and Maintenance Manual

©2003 Copyright Limitorque. All rights reserved.
Printed in the United States of America.

Disclaimer

No part of this book shall be reproduced, stored in a retrieval system, or transmitted by any means, electronic, mechanical, photocopying, recording, or otherwise without the written permission of Limitorque. While every precaution has been taken in the preparation of this book, the publisher assumes no responsibility for errors or omissions. Neither is any liability assumed for damages resulting from the use of the information contained herein.

This document is the proprietary information of Limitorque, furnished for customer use ONLY. No other uses are authorized without written permission from Limitorque.

Limitorque reserves the right to make changes, without notice, to this document and the products it describes. Limitorque shall not be liable for technical or editorial errors or omissions made herein; nor for incidental or consequential damages resulting from the furnishing, performance, or use of this document.

This manual contains information that is correct to the best of Limitorque's knowledge. It is intended to be a guide and should not be considered as a sole source of technical instruction, replacing good technical judgment, since all possible situations cannot be anticipated. If there is any doubt as to exact installation, configuration, and/or use, call Limitorque at (434) 528-4400.

The choice of system components is the responsibility of the buyer, and how they are used cannot be the liability of Limitorque. However, Limitorque's sales team and application engineers are always available to assist you in making your decision. The latest revisions to this document are available online at http://www.limitorque.com.

Table of Contents

Page #

1 Introduction 1-1
1.1 Purpose 1-1
1.2 User Safety 1-1

2 Product Capabilities and Features 2-1
2.1 Initial Inspection and Storage Instructions 2-1
2.2 Product Identification 2-1
2.3 Inspection and Recording 2-2
2.4 Storage Procedure 2-2

3 Actuator Weights 3-1

4 Installation Instructions 4-1
4.1 Safety Precautions 4-1
4.2 Safety Practices 4-1
4.3 Prepare Initial Actuator 4-2
4.3.1 Mounting Base 4-2
4.3.2 Stem Acceptance 4-2
4.4 Setting Limit Switch 4-3
4.4.1 Two-Train Geared Limit Switch 4-3
4.4.2 Four-Train Geared Limit Switch 4-6
4.5 Setting Torque Switch 4-8
4.5.1 SMB-000 Double Torque Switch 4-8
4.5.2 SMB-00 Double Torque Switch 4-11
4.5.3 SMB-0 through SMB-5 Double Torque Switch 4-13
4.6 Position Indication 4-15
4.6.1 Local Position Indicator 4-15
4.6.2 Remote Position Indicator (50 ohm or 1000 ohm Potentiometer) 4-15
4.6.3 Remote Position Indicator (Resistance-to-Current Signal Converter) 4-15
4.7 Additional Electrical Components 4-17
4.7.1 Reversing Starter 4-17
4.7.2 Overload Relays 4-17
4.7.3 Control Station 4-18

5 Operation 5-1
5.1 Motor Operation 5-1
5.2 Manual Operation 5-2

6 Maintenance 6-1
6.1 Routine Maintenance 6-1
6.2 Major Maintenance 6-1
6.3 Lubrication 6-2
6.3.1 Lubrication Inspection 6-2
6.3.2 Standard Lubricants 6-2
6.3.3 Minimum Lubricant Qualities Required 6-3

Page #

7 SMB Disassembly & Reassembly 7-1

7.1 SMB-000 7-1
7.1.1 SMB-000 Disassembly 7-1
7.1.2 SMB-000 Reassembly 7-2
7.1.3 To Replace Stem Nut Only 7-2
7.1.4 Gasket Instructions 7-3
7.2 SMB-00 7-9
7.2.1 SMB-00 Disassembly 7-9
7.2.2 SMB-00 Reassembly 7-10
7.2.3 To Replace Stem Nut Only 7-10
7.2.4 Gasket Instructions 7-11
7.3 SMB-0, 1, 2, 3, 4, 4T 7-19
7.3.1 SMB-0, 1, 2, 3, 4, 4T Disassembly 7-19
7.3.2 SMB-0, 1, 2, 3, 4, 4T Reassembly 7-20
7.3.3 To Replace Stem Nut Only 7-21
7.3.4 Gasket Instructions 7-21
7.4 SMB-5 (Thrust and Torque) and SMB-5T (Torque Only) 7-28
7.4.1 SMB-5 and SMB-5T Disassembly 7-28
7.4.2 SMB-5 and SMB-5T Reassembly 7-30

8 SB Disassembly and Reassembly 8-1

8.1 SB-00 8-1
8.1.1 SB-00 Disassembly/Stem Nut Removal 8-1
8.1.2 SB-00 Reassembly/Stem Nut Installation 8-2
8.2 SB-0 8-5
8.2.1 SB-0 Disassembly/Stem Nut Removal 8-5
8.2.2 SB-0 Reassembly/Stem Nut Installation 8-5
8.3 SB-1 8-8
8.3.1 SB-1 Disassembly/Stem Nut Removal 8-8
8.3.2 SB-1 Reassembly/Stem Nut Installation 8-8
8.4 SB-2 8-11
8.4.1 SB-2 Disassembly/Stem Nut Removal 8-11
8.4.2 SB-2 Reassembly/Stem Nut Installation 8-12
8.5 SB-3 8-15
8.5.1 SB-3 Disassembly/Stem Nut Removal 8-15
8.5.2 SB-3 Reassembly/Stem Nut Installation 8-15
8.6 SB-4 8-18
8.6.1 SB-4 Disassembly/Stem Nut Removal 8-18
8.6.2 SB-4 Reassembly/Stem Nut Installation 8-18

9 Troubleshooting 9-1

10 How to Order Parts 10-1

11 Regulatory Information 11-1

Figures

	Page #
Figure 2.1 – Typical SMB	2-2
Figure 4.1 – Two-Train Geared Limit Switch–Rotor-Type	4-4
Figure 4.2 – Four-Train Geared Limit Switch–Rotor-Type	4-6
Figure 4.3 – SMB-000 Double Torque Switch	4-9
Figure 4.4 – SMB-00 Double Torque Switch	4-11
Figure 4.5 – SMB-0 Through -5 Double Torque Switch	4-13
Figure 4.6 – Typical Connection for a 50-ohm Potentiometer	4-16
Figure 4.7 – Typical Connection for 1000-ohm Potentiometer	4-16
Figure 4.8 – Typical Connection for Older Version R/I Converter	4-17
Figure 4.9 – Typical Connection for PT20SD R/I Converter	4-17
Figure 4.10 – Typical Wiring Diagram—Built-in Reversing Starter and Control Station for a Three-Phase Power Supply	4-18
Figure 7.1 – SMB-000 Parts Diagram- Side View	7-4
Figure 7.2 – SMB-000 Parts Diagram - Top View	7-5
Figure 7.3 – SMB-000 Exploded View	7-6
Figure 7.4 – SMB-00 Parts Diagram – Motor End View	7-12
Figure 7.5 – SMB-00 Parts Diagram – Top View	7-13
Figure 7.6 – SMB-00 Parts Diagram – Side View	7-14
Figure 7.7 – SMB-00 Parts Diagram – Side Mounted Handwheel Detail	7-15
Figure 7.8 – SMB-00 Exploded View	7-16
Figure 7.9 – SMB-0 through SMB-4 and 4T Parts Diagram – Top View	7-22
Figure 7.10 – SMB-0 through SMB-4 and 4T Parts Diagram – Worm Shaft Side View	7-23
Figure 7.11 – SMB-0 through SMB-4 and 4T Parts Diagram – Drive Sleeve Side View	7-24
Figure 7.12 – SMB-0 through SMB-4 and 4T Exploded View	7-25
Figure 7.13 – SMB-5 and 5T Parts Diagram	7-34
Figure 7.14 – SMB-5 and 5T - Top View	7-35
Figure 7.15 – SMB-5 and 5T Declutch Housing Detail	7-36
Figure 7.16 – SMB-5 and 5T Exploded View	7-37
Figure 8.1 – SB-00 Parts Diagram	8-3
Figure 8.2 – SB-0 Parts Diagram	8-6
Figure 8.3 – SB-1 Parts Diagram	8-9
Figure 8.4 – SB-2 Parts Diagram	8-13
Figure 8.5 – SB-3 Parts Diagram	8-16
Figure 8.6 – SB-4 Parts Diagram	8-19

Tables

Table 3.1 – Actuator Weights	3-1
Table 4.1 – Mounting Base Dimensions	4-2
Table 4.2 – Maximum Stem Acceptance	4-2
Table 4.3 – Two-Train Geared Limit Switch–Parts List	4-5
Table 4.4 – Four-Train Geared Limit Switch–Parts List	4-7
Table 4.5 – SMB-000 Double Torque Switch Parts List	4-10
Table 4.6 – SMB-00 Torque Switch Parts List	4-12
Table 4.7 – SMB-0 through SMB-5 Double Torque Switch Parts List	4-14
Table 6.1 – Approximate Volumes and Weights of Lubricants	6-3
Table 7.1 – SMB-000 Parts List	7-7
Table 7.2 – SMB-00 Parts List	7-17
Table 7.3 – SMB-0 through SMB-4 and 4T Parts List	7-26
Table 7.4 – SMB-5 and 5T Parts List	7-38
Table 8.1 – SB-00 Parts List	8-4
Table 8.2 – SB-0 Parts List	8-7
Table 8.3 – SB-1 Parts List	8-10
Table 8.4 – SB-2 Parts List	8-14
Table 8.5 – SB-3 Parts List	8-17
Table 8.6 – SB-4 Parts List	8-20
Table 10.1 – Space Heater Size per Voltage Rating	10-1

1 Introduction

1.1 Purpose

This Installation and Maintenance Manual explains how to install and maintain SMB and SB actuators. Information on installation, operation, disassembly, lubrication, and spare parts is provided.

1.2 User Safety

Safety notices in this manual detail precautions the user must take to reduce the risk of personal injury and damage to the equipment. The user must read and be familiar with these instructions before attempting installation, operation, or maintenance. Failure to observe these precautions could result in serious bodily injury, damage to the equipment, void of the warranty, or operational difficulty.

Safety notices are presented in this manual in three forms:

▲ WARNING: Refers to personal safety. Alerts the user to potential danger. Failure to follow warning notices could result in personal injury or death.

CAUTION: Directs the user's attention to general precautions that, if not followed, could result in personal injury and/or equipment damage.

NOTE: Highlights information critical to the user's understanding of actuator installation and operation.

2 Product Capabilities and Features

SMB and SB Series actuators easily operate all types of valves: gate, globe, plug, ball, and butterfly valves, and specialized valves and mechanisms.

The actuators meet rigid safety requirements. The housing is durable cast-iron, acceptable for use in the nuclear power industry as well as other industries.

The actuators are available with optional integral controls and other features.

The actuators have a removable stem nut that allows transferring of the actuator from one valve to another without major disassembly.

2.1 Initial Inspection and Storage Instructions

▲ WARNING: Read this Installation and Maintenance Manual carefully and completely before attempting to install, operate, disassemble, or troubleshoot the actuator. Be aware of the electrical hazards.

2.2 Product Identification

The actuator unit nameplate is located on the back of the unit opposite the limit switch compartment. The nameplate contains the following information:

- Point of Manufacture
- Unit Size
- Order Number
- Serial Number
- Customer Tagging
- CE Stamp

The motor nameplate is located on the motor. The nameplate contains the following information:

- ID Number
- Run Torque
- RPM
- Full Load Amps
- Insulation Class
- Horsepower
- Service Factor
- Hertz
- Ambient Temperature
- Start Torque
- Enclosure Type
- Volts
- Locked Rotor Amps
- Duty
- Phase
- Motor Code
- Connection Diagram

Figure 2.1 – Typical SMB (0 through 4)

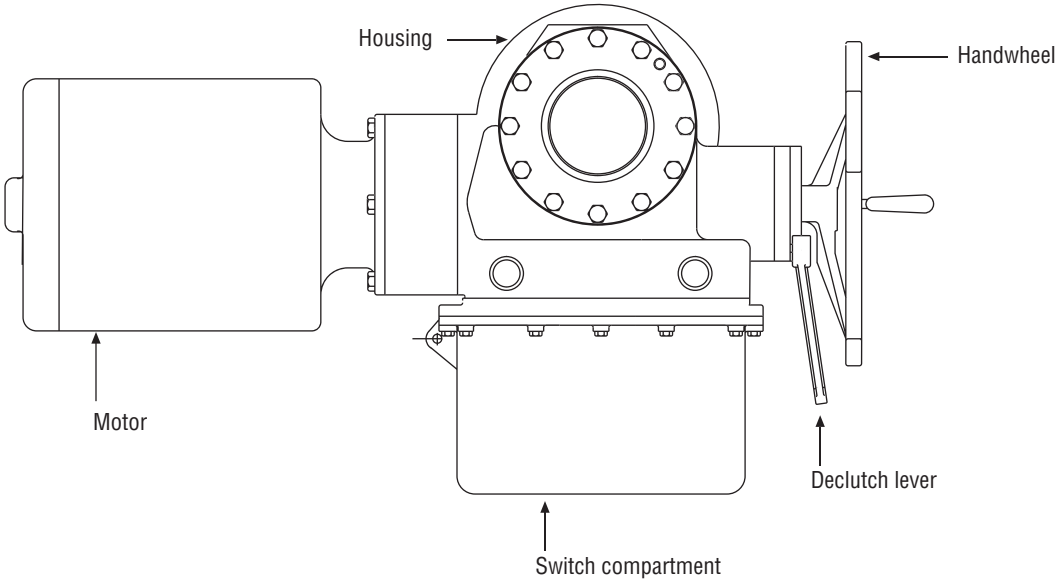

2.3 Inspection and Recording

Upon receipt of the actuator:

1. Carefully remove the actuator from the shipping carton or skid. Thoroughly examine the equipment for any physical damage that may have occurred during shipment. If damaged, immediately report the damage to the transport company.
2. A nameplate is attached to each actuator. Record this information for future reference, i.e. ordering parts or obtaining further information.

2.4 Storage Procedure

NOTE: The following is our recommended storage procedure to retain maximum product integrity during storage. Failure to comply with recommended procedures will void the warranty. For longer-term storage, contact Limitorque for procedures and recommendations.

Storage (less than 1 year)

Actuators are not weatherproof until properly installed on the valve or prepared for storage.

Store actuators in a clean, dry, protected warehouse, away from excessive vibration and rapid temperature changes. If the actuators must be stored outside, they must be stored off the ground, high enough to prevent them from being immersed in water or buried by snow.

1. Position the actuator in storage with motor and switch compartment horizontal.
2. Connect the internal heaters (if supplied) or place desiccant in the switch compartment.
3. Replace all plastic caps or plugs with metal pipe plugs and ensure that all cover bolts are tight.
4. If the actuator is mounted on a valve and the stem protrudes from the actuator, a suitable stem cover must be provided.

3 Actuator Weights

The approximate weights of the SMB actuators and SB and SBD options are provided below:

Table 3.1 – Actuator Weights[1]

Actuator	Weight[1]		Adder for SB		Adder for SBD	
	lb.	kg	lb.	kg	lb.	kg
SMB-000	135	62	N/A	N/A	N/A	N/A
SMB-00	200	90	65	30	100	46
SMB-0	350	159	180	83	210	97
SMB-1	460	209	200	92	325	150
SMB-2	580	263	220	101	345	159
SMB-3	1200	553	500	230	825	380
SMB-4&4T	2020	916	795	366	1285	591
SMB-5&5T	3375	1531	N/A	N/A	N/A	N/A
SMB-5XT	5875	2665	N/A	N/A	N/A	N/A

NOTE 1: With the largest motor, no integral controls, and standard compartment cover.

4 Installation Instructions

4.1 Safety Precautions

⚠ WARNING: Read this Installation and Maintenance Manual carefully and completely before attempting to install, operate, or troubleshoot the Limitorque actuator.

⚠ WARNING: Be aware of electrical hazards. Turn off incoming power before working on the actuator and before opening the switch compartment.

⚠ WARNING: Potential HIGH PRESSURE vessel — be aware of high-pressure hazards associated with the attached valve or other actuated device when installing or performing maintenance on the actuator. Do not remove the actuator mounting bolts when the actuator is mounted on a rising stem valve unless the valve is in the fully open position and there is no pressure in the line.

⚠ WARNING: Do not attempt to remove the spring cartridge cap, housing cover, or stem nut locknut from the actuator while the valve or actuated device is under load.

⚠ WARNING: Do not manually operate the actuator with devices other than the installed handwheel and declutch lever. Using force beyond the ratings of the actuator and/or using additive force devices such as cheater bars, wheel wrenches, pipe wrenches, or other devices on the actuator handwheel or declutch lever may cause serious personal injury and/or damage to the actuator valve.

⚠ WARNING: Do not exceed any design limitations or make modifications to this equipment without first consulting Limitorque.

⚠ WARNING: Actuators equipped with electrical devices (motors, controls) requiring field wiring must be wired and checked for proper operation by a qualified tradesman.

⚠ WARNING: For maintenance and/or disassembly of the actuator while installed on the valve, ensure that the actuator is not under thrust or torque load. If the valve must be left in service, the valve stem must be locked in such a way as to prevent any movement of the valve stem.

CAUTION: Do not use oversized motor overload heaters. Instead, look for the cause of the overload.

CAUTION: Do not operate the valve under motor operation without first setting or checking the limit switch setting and motor direction.

CAUTION: Do not force the declutch lever into the motor operation position. The lever returns to this position automatically when the motor is energized.

CAUTION: Do not depress the declutch lever during motor operation to stop valve travel.

4.2 Safety Practices

The following check points should be performed to maintain safe operation of the SMB or SB actuator:

- Mount the actuator with the motor in a horizontal plane, if possible.
- Keep the switch compartment clean and dry.
- Keep the valve stem clean and lubricated.
- Set up a periodic operating schedule for infrequently used valves.
- Verify all actuator wiring is in accordance with the applicable wiring diagram.
- Carefully check for correct motor rotation direction. If the valve closes when open button is pushed, the motor leads may have to be reversed.
- Verify the stem nut is secured tightly by the locknut and that the top thread of the locknut is crimped or staked in two places.
- Use a protective stem cover. Check valve stem travel and clearance before mounting covers on rising stem valves.

4.3 Prepare Initial Actuator

Replace all molded plastic conduit and top protectors (installed for shipping purposes only) with metal pipe plugs when installation wiring is complete.

4.3.1 Mounting Base

Table 4.1 – Mounting Base Dimensions

	Mounting Holes	Tap Dimensions	
Actuator	Quantity	MSS	ISO
SMB-000	4	5/16-18 UNC x .63” deep	N/A
SMB-00	4	5/8-11 UNC x 1.13” deep	M16-2 x 29 mm deep
SMB-0	4	3/4-10 UNC x 1.00” deep	M20-2.5 x 26 mm deep
SMB-1	8	5/8-11 UNC x 1.00” deep	M16-2 x 26 mm deep
SMB-2	8	3/4-10 UNC x 1.13” deep	M20-2.5 x 29 mm deep
SMB-3	8	7/8-9 UNC x 1.75” deep	M30-3.5 x 45 mm deep
SMB-4	8	1-1/4-7 UNC x 2.00” deep	M36-4 x 64 mm deep
SMB-4T	8	3/4-10 UNC x 1.63” deep	M20-2.5 x 42 mm deep
SMB-5	12	1-1/2-6 UNC x 3.00” deep	N/A
SMB-5T	16	1-8 UNC x 2.00” deep	N/A
SMB-5XT	16	1-1/16 dia thru holes	N/A

4.3.2 Stem Acceptance

Table 4.2 – Maximum Stem Acceptance

	Maximum Stem Acceptance			
	Two-piece nut design (drive sleeve & stem nut)			
	Max threaded		Max bore & keyway	
Actuator	inch	mm	inch	mm
SMB-000	1.375	35	1.125 w/ 1/4x3/32	26.0 w/ 8x3.5
SMB-00	1.75	44	1.500 w/ 3/8x1/8	37.0 w/ 10x4
SMB-0	2.375	60	1.875 w/ 1/2x3/16	48.0 w/ 14x4.5
SMB-1	2.875	73	2.438 w/ 5/8x7/32	62.0 w/ 18x5.5
SMB-2	3.5	89	2.875 w/ 3/4x1/4	73.0 w/ 20x6
SMB-3	5	127	4.250 w/ 1.0x3/8	108.0 w/ 28x8
SMB-4	5	127	4.500 w/ 1.0x1/2	114.0 w/ 32x9
SMB-4T	N/A	N/A	7.000 w/ 1-3/4x5/8	146.0 w/ 36x10
SMB-5	6.25	159	5.250 w/ 1-1/4x7/16	133.0 w/ 36x10
SMB-5T	N/A	N/A	8.000 w/ 2x3/4	152.0 w/ 40x11
SMB-5XT	N/A	N/A	10.000 w/ 1-1/4x5/8	N/A
SB-00	1.25	32		
SB-0	2.375	60		
SB-1	2.625	66		
SB-2	3.50	89		
SB-3	4.00	102		
SB-4	5.00	127		

4.4 Setting The Limit Switch

⚠ WARNING: Disconnect all incoming power before opening or replacing the limit switch compartment cover.

CAUTION: When wiring control circuits, distinguish between "normally open" and "normally closed" terminals on the geared limit switch.

CAUTION: Do NOT attempt to repair the limit switch gear box. Replace entire limit switch gear box.

CAUTION: Do NOT use abrasive cloth to clean the silver contacts on the limit switch. Contacts should be burnished.

CAUTION: Before motor operation, reset the geared limit switch if the actuator has been dismantled or removed from the valve.

NOTE: Clean the limit switch cover thoroughly and apply a thin coat of grease on machined flange surfaces before mounting on an explosionproof actuator.

4.4.1 Two-Train Geared Limit Switch

The rotor-type, two-train geared limit switch employs two rotary drum switches. Each rotary drum switch contains four contacts. When the rotor is properly set to trip at the desired position, two of these contacts open electric circuits and two of the contacts close electric circuits. One rotor is normally set to trip at the full open position of the valve, and the other rotor is normally set to trip at the full close position of the valve.

Each drum switch may be adjusted independently of the other:

- First Drum Switch—one circuit is used to open the "open" holding coil circuit of the motor controller, one circuit is used to control the "open" indicating light.
- Second Drum Switch—one circuit is used to open the "close" holding coil circuit of the motor controller, one circuit is used to control the "closed" indicating light.

For the geared limit switches to trip at any desired position, follow the setting procedure below.

Piece numbers refer to **Figure 4.1** and **Table 4.3**.

1. Verify all power is OFF.
2. Using the handwheel, manually open the valve to the full open position. See Section 5.2 Manual Operation. Note the direction of rotation of the **Intermittent Gear Shaft** (piece #42), located over the **Rotor** (piece #49) to be set.
3. Using a screwdriver, turn the **Set Rod** (piece #48) clockwise until it reaches a stop position.
4. If the **Rotor** (piece #49) you are setting has not turned 90° to open the contacts that should trip open at this position, insert screwdriver on the **Intermittent Gear Shaft** (piece #42). Turn in the direction noted in Step No. 4 until the **Rotor** (piece #49) turns and opens the contacts to be set.
5. If the **Rotor** (piece #49) has turned so that the contacts are already open, turn the **Intermittent Gear Shaft** (piece #42) in the opposite direction as previously noted in Step No. 4 until the contacts close. Turn the **Intermittent Gear Shaft** (piece #42) slightly in the direction noted in Step No. 4 until the contacts open. The **Rotor** (piece #49) is set at the correct position for contact opening.
6. Back off the **Set Rod** (piece #48) until it stops. Place the screwdriver on the **Intermittent Gear Shaft** (piece #42) to ensure that the shaft is tight and will not rotate. Do not force.
7. Close the valve completely. Repeat Step No. 1 through 6 to set the tripping position for the other **Rotor** (piece #49).

Figure 4.1 – Two-Train Geared Limit Switch – Rotor-Type

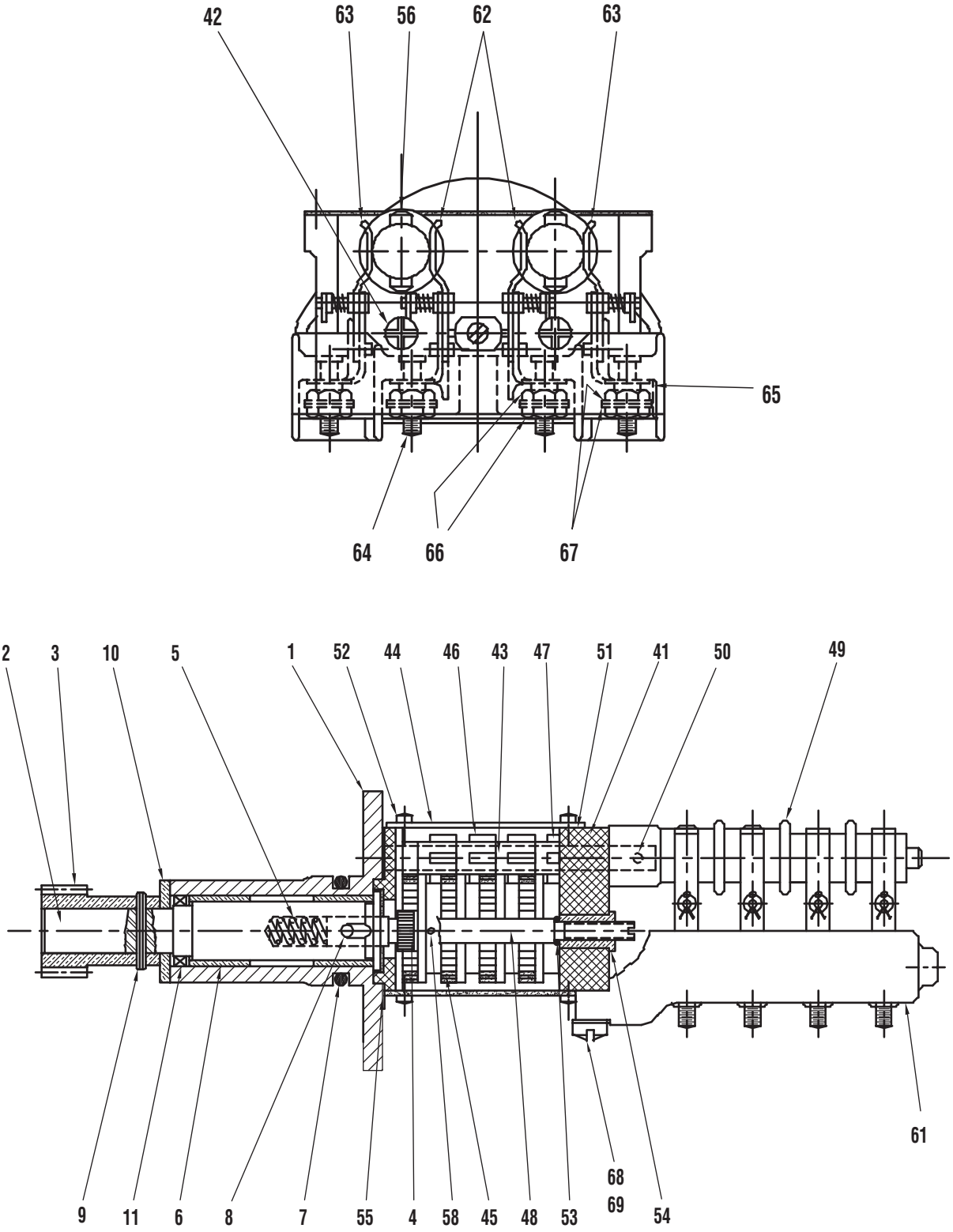

01-472-0006-3

Table 4.3 – Two-Train Geared Limit Switch – Parts List

Piece	Quantity	Description
1	1	Cartridge
2	1	Drive Sleeve and Shaft
3	1	Drive Pinion
4	1	Drive Pinion (Secondary)
5	1	Declutch Spring
6	2	Bushing
7	1	O-Ring
8	1	Pin
9	1	Groove Pin (1/8" x 1" Long)
10	1	Washer
11	1	Oil Seal
41	1	Gear Frame
42	2	Intermittent Gear Shaft
43	2	Intermittent Pinion Shaft
44	2	Geared Limit Frame Cover
45	8	Intermittent Gear
46	6	Intermittent Pinion
47	2	Stem Spur Pinion
48	1	Set Rod
49	2	Rotor
50	2	Groove Pin (3/32" x 3/4" Long)
51	2	Cover Gasket
52	8	#6-32 x 1/4" Long Fillet Head Machine Screw
53	1	O-Ring #1820-3
54	1	Setting Rod Bushing
55	1	Gear Frame Gasket
56	8	Insert (Rotor)
57	2	O-Ring (For Intermittent Gear Shaft piece #42) (Not shown)
58	2	Groove Pin (1/8" x 1" Long)
61	1	Finger Base
62	8	Right Hand Finger Assembly
63	8	Left Hand Finger Assembly
64	16	#10-32 x 1" Long Hex Head Machine Screw
65	32	#10 Lockwasher
66	32	#10-32 Hex Nut
67	24	#10 Washer
68	2	#1/4-20 x 7/8" Long Fillet Head Cap Screw
69	2	1/4" Internal Tooth Lockwasher

4.4.2 Four-Train Geared Limit Switch

The rotor-type, four-train geared limit switch employs four rotary drum switches. Each rotary drum switch contains four contacts. When the rotor is properly set to trip at the desired position, two of these contacts open electric circuits and two of the contacts close electric circuits. One rotor is set to trip at the full open position of the valve, and one rotor is set to trip at the full close position of the valve. The other two rotors are set at some intermediate position depending on the application.

For the geared limit switches to trip at any desired position, follow the steps in **Section 4.4.1**, **Two-Train Geared Limit Switch**, with the exception that the piece numbers refer to **Figure 4.2** and **Table 4.4**.

NOTE: The upper **Set Rod** (piece #48) allows adjustment of the two adjacent upper rotors, and the lower **Set Rod** (piece #48) allows adjustment of the two adjacent lower rotors.

Figure 4.2 – Four-Train Geared Limit Switch – Rotor-Type

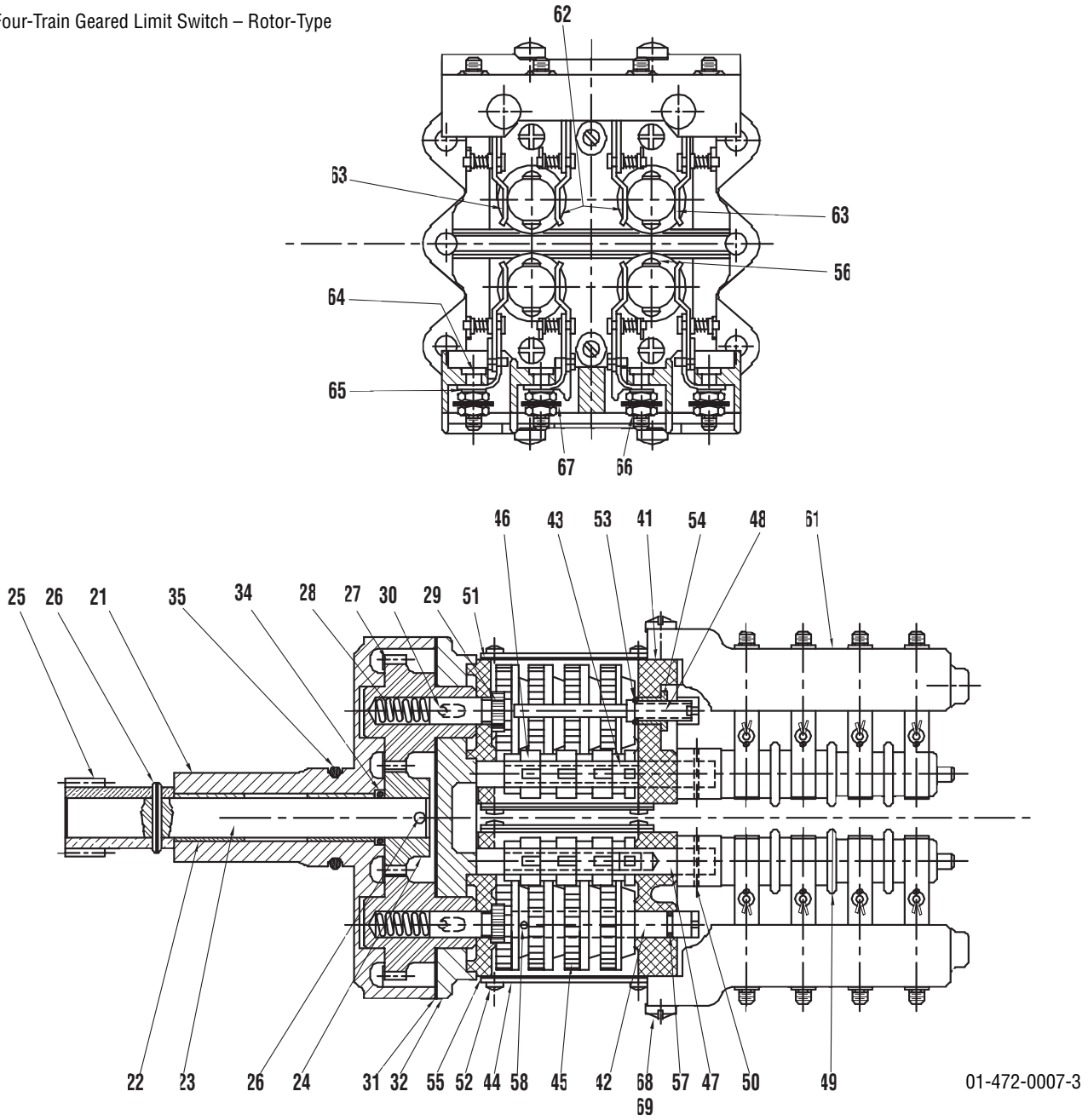

Table 4.4 – Four-Train Geared Limit Switch–Parts List

Piece	Quantity	Description
21	1	Cartridge
22	2	Oilite Bushing
23	1	Drive Shaft
24	1	Drive Pinion (Internal)
25	1	Helical Pinion
26	2	Groove Pin (1/8" x 1" Long)
27	2	Drive Sleeve and Gear
28	2	Declutch Spring
29	2	Drive Pinion Spur
30	2	Pin (1/2" x 11/16" Long)
31	1	Cartridge Gasket
32	1	Cartridge Mounting Plate
33	4	#1/4-20 x 5/8" Long Socket Head Cap Screw and Lockwasher
34	1	O-Ring #6227-11
35	1	O-Ring #6227-11
36	4	#5/8"-18 x 5/8" Fillet Head Cap Screw and Lockwasher
41	2	Gear Frame
42	4	Intermittent Gear Shaft
43	4	Intermittent Pinion Shaft
44	4	Geared Limit Frame Cover
45	16	Intermittent Gear
46	12	Intermittent Pinion
47	4	Stem Spur Pinion
48	2	Set Rod
49	4	Rotor
50	4	Groove Pin (3/32" x 3/4" Long)
51	4	Cover Gasket
52	16	#6-32 x 1/4" Long Fillet Head Machine Screw
53	2	O-Ring #1820-3
54	2	Setting Rod Bushing
55	2	Gear Frame Gasket
56	16	Insert (Rotor)
57	2	O-Ring #1820-5
58	2	Groove Pin (1/8" x 1" Long)
61	2	Finger Base
62	16	Right Hand Finger Assembly
63	16	Left Hand Finger Assembly
64	32	#10-32 x 1" Long Hex Head Cap Screw
65	64	#10 Lockwasher
66	64	#10-32 Hex Nut
67	48	#10 Washer
68	4	#1/4-20 x 7/8" Long Fillet Head Cap Screw
69	4	1/4" Internal Tooth Lockwasher

4.5 Setting Torque Switch

The torque switch is designed to protect the actuator in open and close directions.

⚠ WARNING: Disconnect all incoming power before working on the torque switch.

⚠ WARNING: Do not attempt to remove either the spring cartridge cap or the housing cover from the actuator while the valve is torque-seated.

CAUTION: Do not use abrasive cloth to clean the contacts on the torque switch.

CAUTION: A maximum stop setting plate is furnished on all actuators. Do not exceed this maximum setting without consulting Limitorque.

4.5.1 SMB-000 Double Torque Switch

NOTE: Torque settings must be made with the switch mounted in the actuator.

Piece numbers correspond to **Figure 4.3** and **Table 4.5**.

To set the torque switch:

1. Verify all electric power is OFF.
2. Loosen **Pan Head Screws** (piece #30).
3. For open or close operation, set **Striker** (piece #25) to the required torque setting. Match the edge of the Striker with the desired number. The higher the number, the higher the torque output of the actuator.
4. Tighten **Pan Head Screws** (piece #30).
5. For torque seated valves, operate the valve electrically to seat the valve. Ensure tight shut-off by tripping the torque switch contacts.

Figure 4.3 – SMB-000 Double Torque Switch

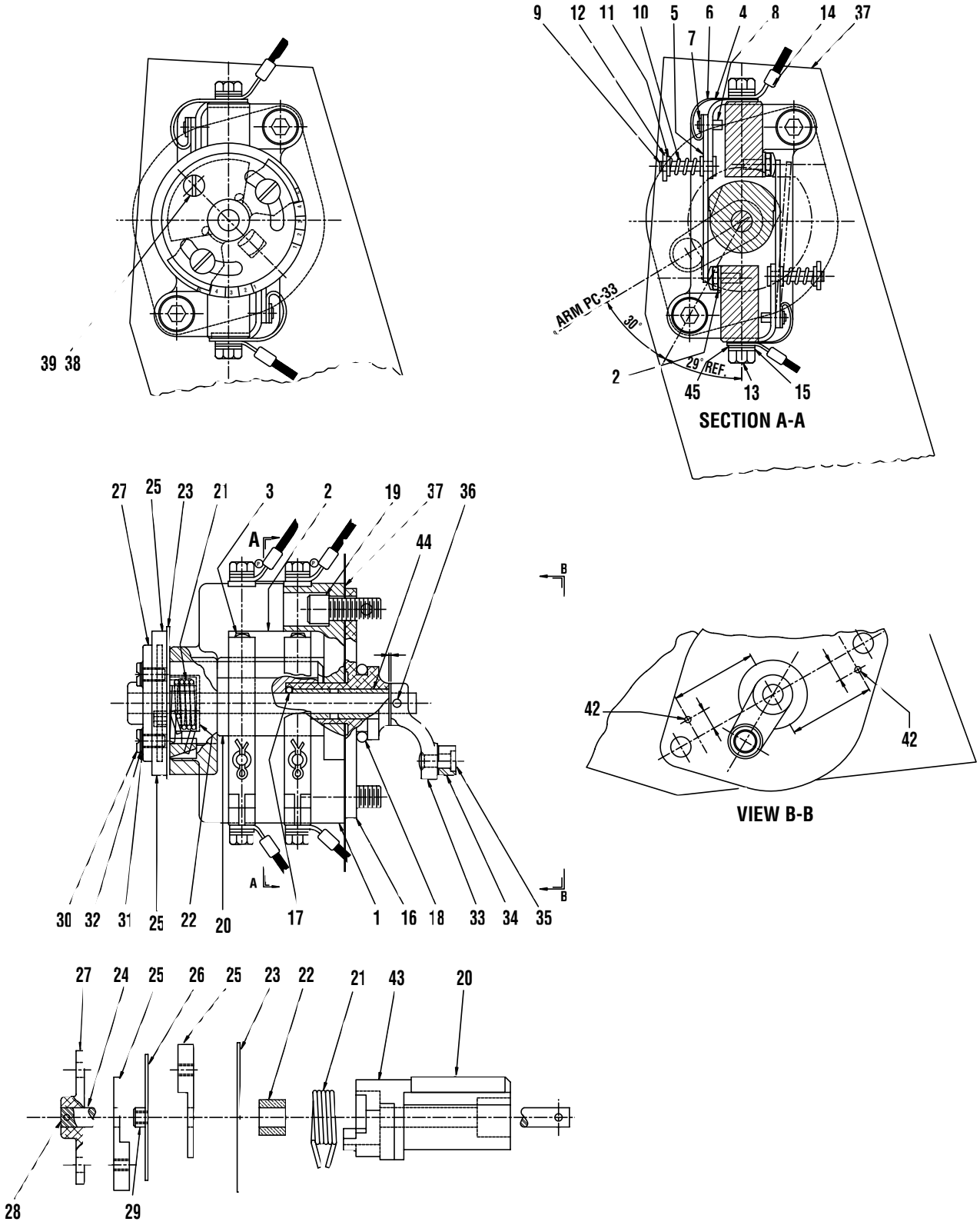

01-474-0056-4

Table 4.5 – SMB-000 Double Torque Switch Parts List

Piece	Quantity	Description
1	1	Terminal Block
2	4	Contact Block
3	4	Contact Screw
4	4	Finger Holder
5	4	Finger
6	4	Shunt
7	4	Shunt Washer (1/4" O.D. x 3/32" I.D. x 1/32" Thick)
8	4	Rivet
9	4	Finger Spring Stud
10	4	Compression Spring
11	8	Spring Cup Washer
12	4	Cotter Pin (3/64" x 1/4")
13	4	Hex Head Machine Screw (#10-32 x 3/8")
14	4	Ring Tongue Connector 18" (#16 AWG Type TU Pigtail)
15	4	Shakeproof Lockwasher, Internal Teeth
16	1	Torque Switch Mounting Bracket
17	1	O-Ring
18	1	O-Ring
19	2	Socket Head Cap Screw (1/4-20 x 1/2" Long)
20	1	Cam
21	1	Torsion Spring
22	1	Spring Mandrel
23	1	Dial
24	1	Shaft
25	2	Striker
26	1	Torque Limiting Plate
27	1	Striker Hub
28	1	Roll Pin (1/16" x 1/2")
29	1	#4 Swage Nut
30	2	Pan Head Screw (#8-32 x 5/16" Long, Slotted)
31	2	Shakeproof Lockwasher, External Teeth
32	2	Flatwasher (11/64" I.D. x 5/16" O.D. x .032" Thick)
33	1	Arm
34	1	Roller
35	1	Roller Pin
36	1	Groove Pin (3/32" diameter x 3/32")
37	1	Arc Barrier
38	1	Pan Head Screw #4-40 x 1/4"
39	1	Lockwasher, External Tooth
42	2	Spring Pin
43	1	Cam Insert
44	2	Bushing (For piece #16)
45	4	Washer

4.5.2 SMB-00 Double Torque Switch

NOTE: Torque settings must be made with the switch mounted in the actuator.

Piece numbers correspond to **Figure 4.4** and **Table 4.6**.

To set the torque switch:

1. Verify all electric power is OFF.
2. For the open or close direction torque switch, loosen **Machine Screw** (piece #35) and set **Pointer** (piece #7) at the desired torque setting. The higher the number, the higher the torque output of the actuator.
3. Tighten **Machine Screw** (piece #35).
4. For torque seated valves, operate the valve electrically to seat the valve. Ensure tight shut-off by tripping the torque switch contacts.

Figure 4.4 – SMB-00 Double Torque Switch

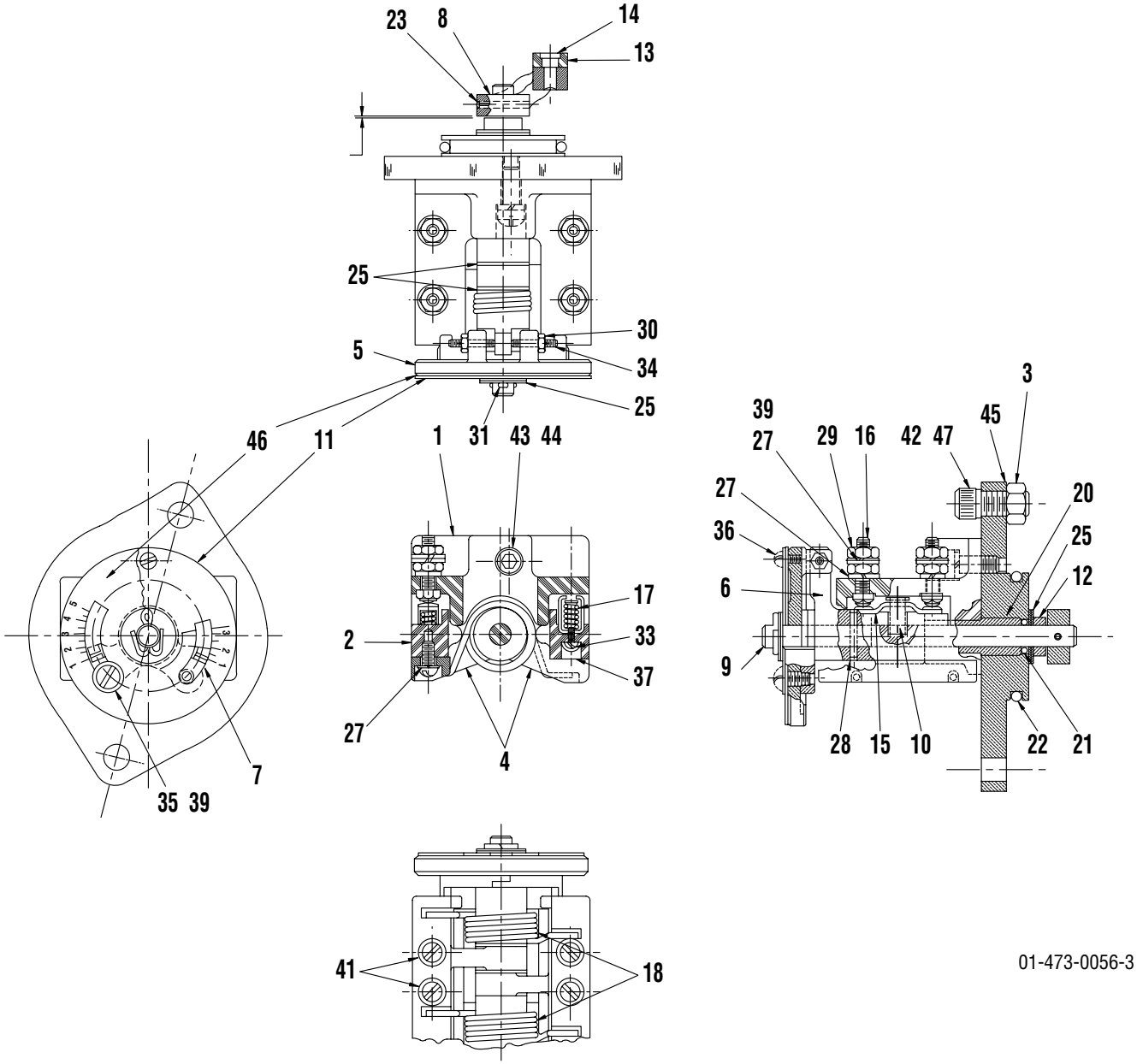

Table 4.6 – SMB-00 Double Torque Switch Parts List

Piece	Quantity	Description
1	1	Terminal Block
2	2	Contact Block
3	2	Hex Nut
4	2	Contact Arm
5	1	Dial
6	1	Actuating Link
7	2	Pointer
8	1	Tripper Arm
9	1	Shaft
10	2	Contact Support
11	1	Torque Limiter Plate
12	1	Bushing
13	1	Roller
14	1	Roller Pin
15	2	Contact Finger
16	4	Terminal Stud
17	2	Compression Spring
18	2	Torsion Spring
20	1	Bearing
21	1	O-Ring
22	1	O-Ring
23	1	Pin
25	6	Thrust Washer
27	12	Lockwasher #10
28	1	Pin
29	8	Hex Nut #10-32
30	2	Hex Nut #6-32
31	1	Cotter Pin (3/32” dia. x 3/4” Long)
33	2	Pan Head Self-Tapping Screw (#4-40 x 1/4” Long)
34	2	Hex Socket Set Screw (#6-32 x 5/8” Long)
35	2	Round Head Machine Screw (#10-32 x 3/8” Long)
36	1	Round Head Machine Screw (#5-40 x 3/8” Long)
37	1	Wax
39	6	Flatwasher
41	4	Round Head Machine Screw
42	2	Lockwasher, Internal Teeth
43	1	Socket Head Cap Screw
44	1	Lockwasher
45	1	Mounting Bracket
46	1	Dial Plate
47	2	Socket Head Cap Screw

4.5.3 SMB-0 through SMB-5 Double Torque Switch

NOTE: Torque settings must be made with the switch mounted in the actuator.

Piece numbers correspond to **Figure 4.5** and **Table 4.7**.

To set the torque switch:

1. Verify all electric power is OFF.
2. For the open or close direction torque switch, loosen **Machine Screw** (piece #35) and set **Pointer** (piece #7) at the desired torque setting. The higher the number, the higher the torque output of the actuator.
3. Tighten **Machine Screw** (piece #35).
4. For torque seated valves, operate the valve electrically to seat the valve. Ensure tight shut-off by tripping the torque switch contacts.

Figure 4.5 – SMB-0 through SMB-5 Double Torque Switch

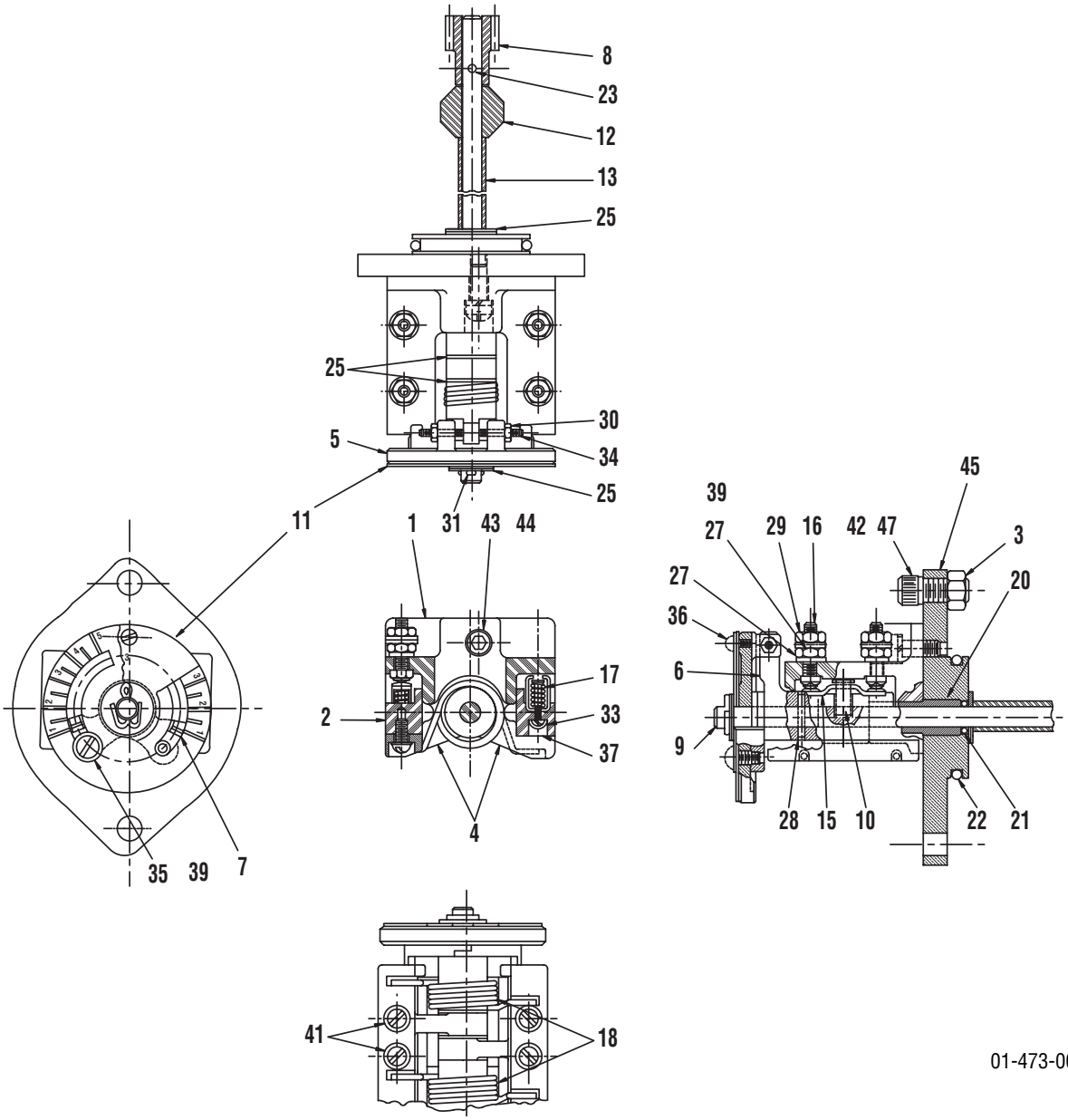

Table 4.7 – SMB-0 through SMB-5 Double Torque Switch Parts List

Piece	Quantity	Description
1	1	Terminal Block
2	2	Contact Block
3	2	Hex Nut - Remove During Installation
4	2	Contact Arm
5	1	Dial
6	1	Actuating Link
7	2	Pointer
8	1	Pinion
9	1	Shaft
10	2	Contact Support
11	1	Torque Limiter Plate
12	1	Bushing
13	1	Spacer
15	2	Contact Finger
16	4	Terminal Stud
17	2	Compression Spring
18	2	Torsion Spring
20	1	Bearing
21	1	O-Ring
22	1	O-Ring
23	1	Pin (3/32" dia. x 5/8" Long)
25	6	Thrust Washer
27	12	Lockwasher #10
28	1	Pin (3/32" dia. x 3/4" Long)
29	8	Hex Nut #10-32
30	2	Hex Nut #6-32
31	1	Cotter Pin (3/32" dia. x 3/4" Long)
33	2	Pan Head Self-Tapping Screw (#4-40 x 1/4" Long)
34	2	Hex Socket Set Screw (#6-32 x 5/8" Long)
35	2	Round Head Machine Screw (#10-32 x 3/8" Long)
36	1	Round Head Machine Screw (#5-40 x 3/16" Long)
37	1	Wax
39	6	Flatwasher
41	4	Round Head Machine Screw
42	2	Lockwasher, Internal Teeth
43	1	Socket Head Cap Screw
44	1	Lockwasher
45	1	Mounting Bracket
47	2	Socket Head Cap Screw

4.6 Position Indication

4.6.1 Local Position Indicator

NOTE: The local dial position indicator displays valve position. The position indicator can only be adjusted when the actuator is mounted on the valve. See **Figures 7.1-7.3** (SMB-000), **7.4-7.8** (SMB-00), **7.9-7.12** (SMB-0 through 4), **7.13-7.16** (SMB-5).

To set the position indicator:

1. Disconnect all incoming power and open or remove the Limit Switch Compartment Cover.
2. Place the valve in the fully “close” position.
3. Loosen the round head machine screw that holds the pointer in place, move the pointer to the “C” position, and retighten the screw.

The indicator is now set.

4.6.2 Remote Position Indicator (50 ohm or 1000 ohm Potentiometer)

The SMB or SB actuator with a potentiometer installed, transmits a 0-10 VDC output signal to a remote position indicator (meter). The potentiometer is powered by 120 VAC. For additional information, see Bulletin 410-10000, Limitorque Position Transmitters and Indicators.

To set the potentiometer:

NOTE: The pinion has been disengaged to prevent damaging the potentiometer prior to setting the valve.

1. Set the potentiometer by turning the pinion until the desired reading is obtained.
2. Loosen the hex nut on the back of the potentiometer and slide the potentiometer in the direction of the idler pinion until the pinions are engaged.
3. Do not force the engagement of the pinions.
4. Retighten the hex nut on the back of the potentiometer.
5. Do not engage the pinion until the actuator and valve positions have been set.

To calibrate the potentiometer:

1. Position the valve at 50% of full travel.
2. Read the resistance from the wiper to either end of the potentiometer.
3. To set the potentiometer to the proper value, loosen the set screw on the potentiometer shaft pinion and rotate the potentiometer shaft to a reading of ~500 ohms for the 1000-ohm potentiometer, or ~25 ohms for the 50-ohm potentiometer.
4. Tighten the set screw.
5. Run the actuator to the fully CLOSED position.
6. Adjust the CLOSED position setting to a value at or above 0 ohms.
7. Run the actuator to the fully OPEN position.
8. Adjust the OPEN position setting to a value at or below 1000 ohms for the 1000-ohm potentiometer; at or below 50 ohms for the 50-ohm potentiometer.
9. Repeat steps 5 through 8 and fine-tune as necessary.

4.6.3 Remote Position Indicator (Resistance-to-Current Signal Converter)

The SMB or SB actuator with a signal converter installed transmits a 4-20 mA output signal to a remote position indicator (meter). The signal converter responds to the input of a 1000-ohm potentiometer and can be powered by 24 VDC or 120 VAC for the older version R/I converter; or 18 VDC, 24 VDC, or 120 VDC for the PT20SD style R/I converter.

To set the the R/I signal converter:

NOTE: The pinion has been disengaged to prevent damaging the potentiometer prior to setting the valve.

1. Set the potentiometer by turning the pinion until the desired reading is obtained.
2. Loosen the hex nut on the back of the potentiometer and slide the potentiometer in the direction of the idler pinion until the pinions are engaged.
3. Do not force the engagement of the pinions.
4. Retighten the hex nut on the back of the potentiometer.
5. Do not engage the pinion until the actuator and valve positions have been set.

To calibrate the R/I signal converter:

1. Position the valve at 50% of full travel.
2. Read the ohms from the wiper to either end of the potentiometer.
3. To set the potentiometer to the proper value, loosen the set screw on the potentiometer shaft pinion and rotate the potentiometer shaft to a reading of 500 ohms.
4. Tighten the set screw.
5. Run the actuator to the fully CLOSED position.
6. Adjust the ZERO control to an output of 4 mA.
7. Run the actuator to the fully OPEN position.
8. Adjust the SPAN control to an output of 20 mA.
9. Repeat steps 5 through 8 to fine-tune as necessary.

Figure 4.6 – Typical Connection for a 50-ohm Potentiometer

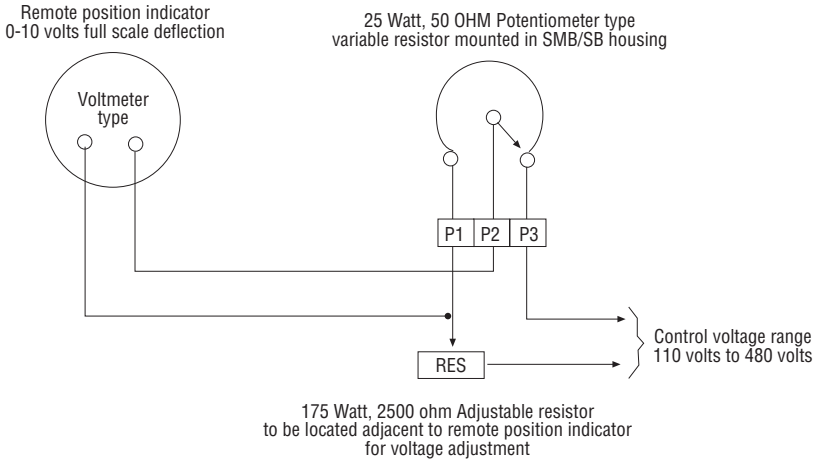

Figure 4.7 – Typical Connection for a 1000-ohm Potentiometer

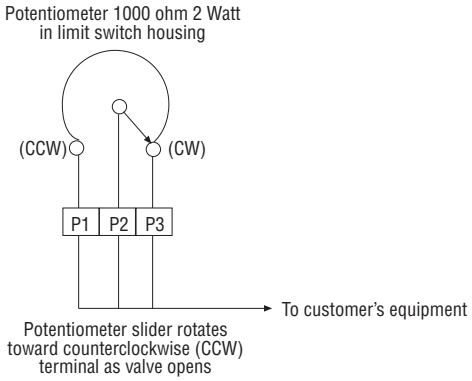

Figure 4.8 – Typical Connection for R/I Signal Converter (Older Version)

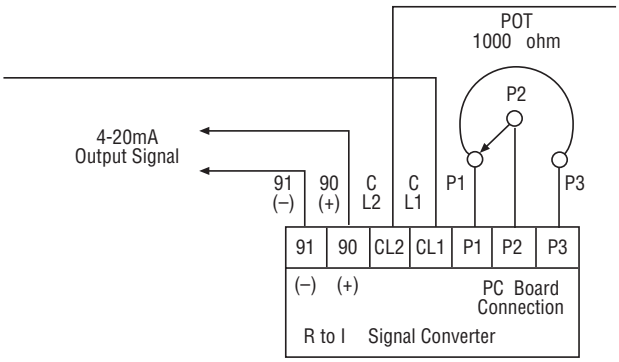

Figure 4.9 – Typical Connection for PT20SD R/I Converter

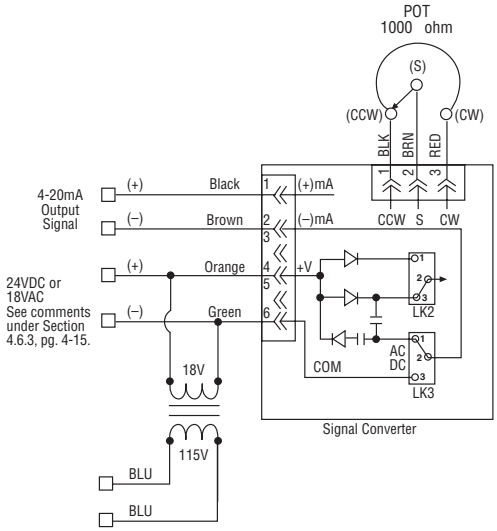

4.7 Additional Electrical Components

4.7.1 Reversing Starter

The reversing starter electrically changes the operation of the electric motor from one direction of rotation to the other. The starter consists of two contactors mounted on a common base and mechanically interlocked.

Each contactor consists of the following:

- three normally open power contacts
- one normally open circuit holding contact
- one normally closed interlock
- one magnetic holding coil

The starter can be provided two ways:

- Mounted within the actuator limit switch compartment
- Supplied in a separate enclosure

4.7.2 Overload Relays

Overload relays de-energize the holding coils of the reversing starter, which open the power contacts to de-energize the electric motor. The relays function at a predetermined current value and can reset either automatically or manually as follows:

- Reset automatically if mounted as detailed in **Figure 4.10**.
- Reset manually if the reversing starter is furnished separately.

The relays are sized in accordance with full load (running) motor current.

4.7.3 Control Station

The control station consists of

- a five-position Local-Stop-Off-Stop-Remote selector switch, padlockable in each position
- a spring return Open-Close selector switch
- green and red LED lights for position indication.

Typical wiring of the control station in conjunction with the motor control circuit is shown below in **Figure 4.10**.

Figure 4.10 – Typical Wiring Diagram—Built-in Reversing Starter and Control Station for a Three-Phase Power Supply

NOTE: Current design. Earlier control wiring varies slightly.

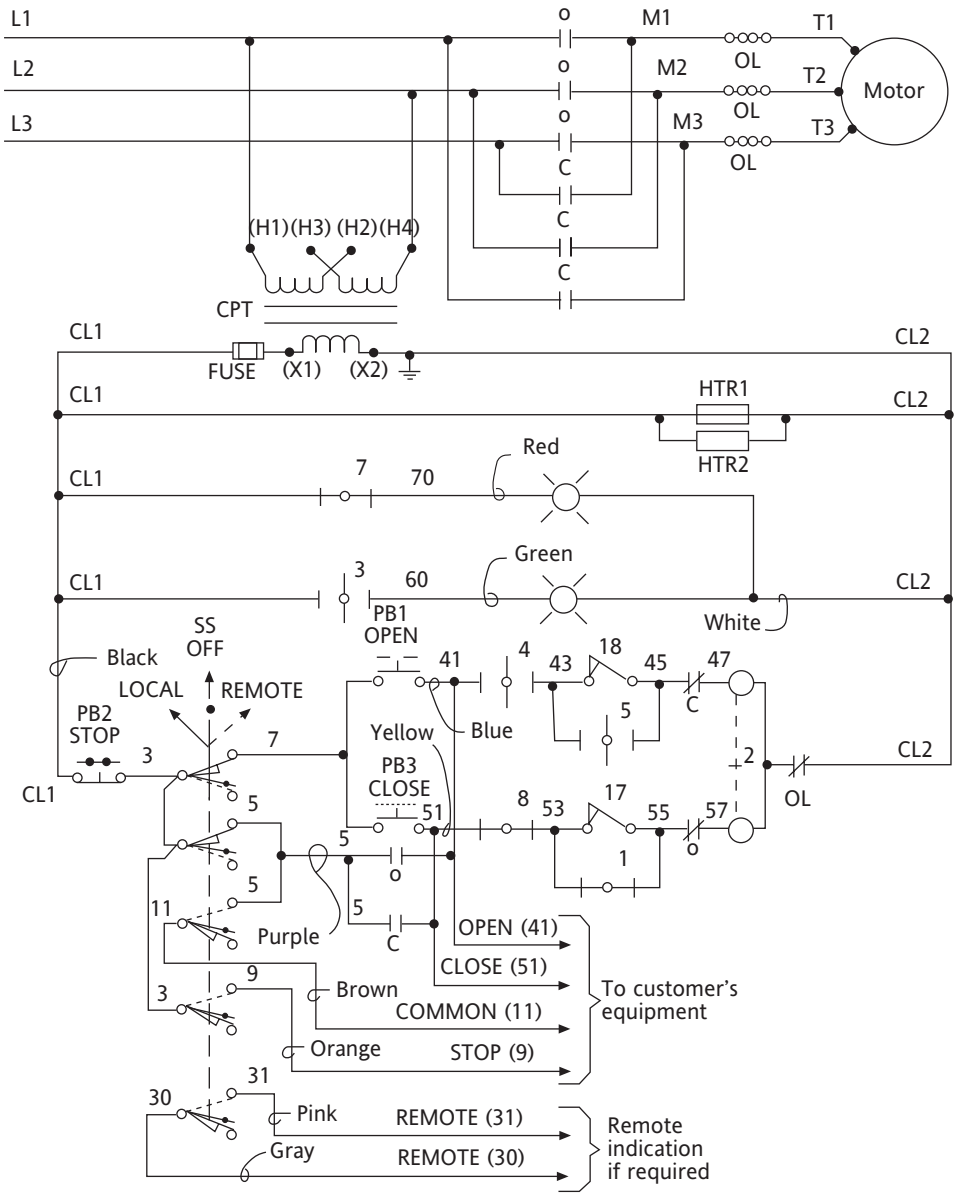

5 Operation

⚠ WARNING: See Section 4.1 and 4.2 on Safety Precautions and Safety Practices prior to operation.

5.1 Motor Operation

Actuator motors are high-starting torque, totally enclosed motors. The motors are furnished in weatherproof, explosionproof, or submersible enclosures. The motors are furnished with ball bearings and provided with grease seals. All three-phase AC motors are squirrel-cage design and all DC motors are compound wound.

Piece numbers refer to **Figure 7.12**. However, this description is applicable to all models. The piece numbers will differ for each model.

The electric motor has a **Motor Pinion** (piece #40) mounted on its shaft extension. This pinion drives the **Worm Shaft Clutch Gear** (piece #41), which is engaged with the **Worm Shaft Clutch** (piece #50). The Worm Shaft Clutch is splined to the **Worm Shaft** (piece #43). The **Worm** (piece #53) is splined to the **Worm Shaft** (piece #43), and when it is rotated, it turns the **Worm Gear** (piece #16).

The **Worm Gear** has two lugs cast onto the top portion that engage the two lugs on the **Drive Sleeve** (piece #11). These lugs are spaced so that when the **Worm Gear** begins to turn during motor operation there is a certain amount of lost motion before the lugs engage, causing the hammer blow effect within the actuator.

As soon as the **Worm Gear Lugs** engage, the **Drive Sleeve**, splined internally with the **Stem Nut** (piece #20), causes the stem nut to rotate and open or close the valve. The **Stem Nut** is threaded to fit the thread of any rising stem valve. In the case of non-rising stem valves, the electric actuator may be mounted in tandem with an additional gear drive, and the **Stem Nut** (piece #20) is bored and keyed to fit the shaft.

The thrust developed by the actuator is absorbed by the heavy-duty **Bearings** (piece #75, 76, 77, 78) on the top and bottom of the main **Drive Sleeve**. As the actuator develops greater torque, when seating the valve, the **Worm** (piece #53) slides axially along the splines of the **Worm Shaft** (piece #43) and compresses the **Belleville Springs** (piece #56) in the torque spring pack.

The **Belleville Springs** are calibrated springs. For every increment of compression from a given size unit, a certain pre-determined amount of torque is developed. The **Worm** mechanically actuates the **Torque Switch**. When the **Worm** moves back a preset distance and develops the torque output required, the **Torque Switch** opens and a pair of electrical contacts that are wired into the motor control circuit interrupt the circuit and stop the motor.

The **Geared Limit Switch** (piece #105) is directly geared to the **Worm Shaft** and is in step at all times with the movement of the actuator. The switch cannot slip because no belts or other friction devices are used in its operation. Once the **Geared Limit Switch** (piece #105) is set to trip at its proper position of valve travel, it will trip at the same point every time.

The **Torque Switch** (piece #104) is wired into the motor control circuit to stop the actuator in the full closed position for any rising stem operation. The **Geared Limit Switch** (piece #105) is wired into the motor control circuit to stop the operator at the full open position. For most 90˚ turn valves and sluice gates, the **Geared Limit Switch** is wired into the motor control circuit to stop the actuator at both the full open and full close position of the valve or gate. The **Torque Switch** is wired in series with the **Geared Limit Switch** in both directions so that in the event of a mechanical overload, the **Torque Switch** will open and cause the motor to stop.

Check the applicable wiring diagram to determine the correct wiring connections made for the torque switch and geared limit switch.

5.2 Manual Operation

In the event of a power failure, the actuator can be operated by hand using the handwheel. The actuator has an automatic handwheel declutching arrangement. For manual operation, the declutch lever is pulled downward. This mechanically disconnects the electric motor from the handwheel through the clutch assembly.

SMB-000 and SMB-00

Piece numbers refer to **Figures 7.1** to **7.3** and **7.4** to **7.8**.
For the SMB-000 and the SMB-00, the **Clutch Ring** (piece #33) and the **Clutch Keys** (piece #23) are moved upward until the **Clutch Keys** engage with the lugs on the bottom of the **Handwheel** (piece #5). For the side-mounted **Handwheel** on the SMB-00, the **Clutch Keys** engage the lugs on the bottom of the **Bevel Gear** (piece #100).

Trippers (piece #28, 29) hold the **Clutch Keys** in this position. The actuator will remain in hand operation indefinitely until the electric motor is energized and the **Tripper Cams** (piece #27) mounted on the **Worm Shaft** (piece #43) cause the trippers to release the **Clutch Ring** (piece #33) and the **Clutch Keys** (piece #23) from their hand position. This is an automatic feature of the actuator.

SMB-0 through SMB-4

Piece numbers refer to **Figures 7.9** to **7.11**.

The declutching action is similar to that of the smaller SMB actuators. When the **Declutch Lever** (piece #10) is depressed, the **Declutch Shaft** (piece #24) causes the **Declutch Fork** (piece #12) to push the **Worm Shaft Clutch Gear** (piece #41) out of engagement with the motor helical gearing and into engagement with the **Handwheel Clutch Pinion** (piece #42). The **Clutch Trippers** (piece #32, 33) lock the worm shaft clutch in this position. When the **Handwheel** (piece #5) is rotated, the **Handwheel Gear** (piece #7) turns the **Handwheel Clutch Pinion** (piece #42) and the **Worm Shaft** (piece #43), placing the actuator into manual operation.

When the electric motor is energized, the **Tripper Pins** (piece #51), which are part of the **Worm Shaft Clutch Gear** (piece #41), cause the **Trippers** to be released, allowing the **Worm Shaft Clutch** (piece #50) to be released from hand operation and engage in motor operation.

For all actuator sizes, when the handwheel is turned, the motor does not rotate; and when the motor is in operation, the handwheel does not rotate in manual operation.

SMB-5 through SMB-5T

Piece numbers refer to **Figures 7.13** to **7.16**.

The declutching action is similar to that of the smaller SMB-0 through 4 actuators. When the **Declutch Lever** (piece #9) is depressed, the rotation of the **Declutch Shaft** (piece #30) causes the **Declutch Fork** (piece #14) to push the **Sliding Gear Clutch** (piece #51) out of engagement with the **Flexible Jaw Clutch Housing** (piece #50) and into engagement with the **Handwheel Gear** (piece #6). The **Clutch Trippers** (piece # 33, 34) lock the **Drive Shaft Clutch** in this position. When the **Handwheel** (piece #5) is rotated, the **Handwheel Shaft and Pinion** (piece #40) turns the **Handwheel Gear** (piece #6) and the **Hollow Drive Shaft** (piece #55), placing the actuator into manual operation.

When the electric motor is energized, the **Motor Clutch Gear Cam Pins** (piece #52), which are part of the **Flexible Jaw Clutch Housing** (piece #50), causes the **Clutch Trippers** (piece #33, 34) to be released, allowing the **Sliding Gear Clutch** to be released from hand operation and engage in motor operation.

For all actuator sizes, when the handwheel is turned, the motor does not rotate; and when the motor is in operation, the handwheel does not rotate.

6 Maintenance

6.1 Routine Maintenance

⚠ WARNING: See Section 4.1 and 4.2 for Safety Precautions and Safety Practices before performing maintenance.

NOTE: A routine maintenance check should be performed every 18 months as a minimum. The frequency can increase based upon the frequency of operation and the ambient environmental conditions.

The routine maintenance check consists of the following:

1. Remove the limit switch compartment and/or control cabinet cover. Inspect for moisture. If moisture is present, dry the compartment and the components.
2. Inspect all electrical controls and contacts in the limit switch compartment and/or control cabinet. Wipe clean all electrical contacts with electrical-type solvent cleaner similar to CRC Lectra Clean and remove foreign residue.
3. Check armature brushes for proper contact and wear when DC motors are employed.
4. Verify all terminal connections are tight.
5. Clean gasketed surfaces on limit switch compartment and/or control cabinet cover. Inspect gaskets and seals for damage. Replace all damaged gaskets or seals for weatherproof and submersible units. Wipe a coating (approximately two mils) of lightweight bearing grease on surfaces of explosionproof cover flanges for protection.
6. Inspect lubricant in accordance with **Section 6.3.1**, **Lubrication Inspection**. Visually check shaft penetrations for indications of seal leakage. If abnormal leakage is found, replace the seal.

NOTE: Slight oil weepage is not a cause for seal replacement. See **Section 6.2**, **Major Maintenance**.

7. Megger test the motor—1 megaohm or higher is considered normal.
8. Clean and lubricate the valve stem for rising stem applications in accordance with the valve manufacturer's lubricant recommendation.

6.2 Major Maintenance

NOTE: Major maintenance is required when an operational deficiency is evident. The deficiency should be thoroughly evaluated to determine the extent to which major maintenance should proceed.

Major maintenance consists of the following:

1. Perform all routine maintenance checks. See **Section 6.1**, **Routine Maintenance**.
2. Disassemble deficient portion of equipment.
3. Replace damaged or excessively worn components with new factory parts.

NOTE: Replace the Worm and Worm Gear as a set to ensure the greatest benefit from replacement. Replace the entire limit switch gear box rather than attempt repairs in the field.

4. Replace all torn gaskets and seals.
5. Inspect stem and stem nut threads carefully for wear and/or damage.
6. Verify all electrical control components are operating before reinstallation.

6.3 Lubrication

Proper lubrication is essential to achieve the actuator design life. The actuator has been designed to minimize maintenance and relubrication requirements. However, periodic inspection is a necessity.

The SMB and SB actuators have a totally sealed gear case, factory-lubricated with grease. The gear case can be mounted in any position. However, those mounting positions that would result in the actuator motor being saturated with lubricant if the seal failed should be avoided and are not recommended.

No seal can remain absolutely tight at all times. Therefore, it is not unusual to find a very small amount of weeping around shaft seals—especially during long periods of idleness such as storage. Grease lubrication minimizes this condition as much as possible. If a small amount is weeping at start-up, remove it with a clean cloth. Once the equipment is operating on a regular basis, the weeping should stop.

6.3.1 Lubrication Inspection

Inspect Limitorque SMB and SB actuators for correct lubrication prior to operating—particularly following a long storage period.

Each application has its own effect on the actuator and the frequency of these inspections should be based on the application and the operating experience. The following lubrication inspection schedule is recommended until operating experience indicates otherwise.

Application	Lubrication Recommendations
Main Gear Case	Inspect lubrication every 18 months or 500 cycles – whichever occurs first.
Geared Limit Switch	Inspect lubrication every 36 months or 1000 cycles – whichever occurs first.
Drive Sleeve Top Bearing	Lubricate every 6 months through housing cover pressure fitting.

During an inspection, consider the following:

- **Quantity**—SMB and SB actuators are built to operate on the immersion principle.

CAUTION: Ensure there is enough lubricant so that the Worm and the Worm Gear are totally immersed in grease regardless of the position. Use the "fill" and "drain" plugs provided on the actuator housing to verify this.

- **Quality**—Inspect lubricant for dirt, water, or foreign matter. If any of these are found:
  1. Flush the actuator with a commercial degreaser/cleaner such as Exxon Varsol #18. This degreaser/cleaner is not corrosive and does not affect the seal materials.
  2. Repack the actuator with fresh lubricant, allowing room for thermal expansion of the grease.
- **Consistency**—Ensure the lubricant is fluid, approximating a standard NLGI-0 grade consistency or less. Thinners such as Amoco WAYTAC #31 oil may be added provided the volume of thinner does not exceed 20% of the total lubricant volume.

6.3.2 Standard Lubricant

- The SMB/SSB actuator gear case is factory lubricated with an NLGI Grade 0 calcium sulfonate base grease suitable for temperatures from -20˚F (-29˚C) to 150˚F (66˚C).

Note 1: For nuclear containment actuators, Exxon Nebula EP-0 and EP-1, or Crompton MOV-Long Life, Grade 0 are the only approved lubricants for SMB-000 through 5.

- Geared Limit Switch: Mobil 28.
- Motor Bearings: Motors furnished for Limitorque actuators are lubricated for life.
- Temperature rating is -20˚F to 150˚F (-29˚C to 66˚C).

NOTE: SMB/SB/SBD-000,00 standard lubricant was Sun Oil Co. (XC-421-39) for serial numbers up to 295809. Sun 50EP (XC-421-39) can not be mixed with Calcium Complex EP-O.

Table 6.1 – Approximate Volume and Weights of Lubricants

Actuator Size	Approximate Volume gallons	liters	Approximate Weight lbs.	kg
SMB/SB/SBD-000	.50	1.9	3.5	1.6
SMB/SB/SBD-00	1.0	3.8	8.5	3.8
SMB/SB/SBD-0	1.5	5.7	12.0	5.4
SMB/SB/SBD-1	2.1	7.9	17.0	7.7
SMB/SB/SBD-2	3.0	11.4	24.0	10.9
SMB/SB/SBD-3	6.0	22.7	50.0	22.7
SMB/SB/SBD-4	9.4	35.6	75.0	34.0
SMB-4T	8.7	32.9	70.0	31.8
SMB-5T	10.0	37.8	80.0	36.4
SMB-5	11.2	42.4	90.0	40.9

6.3.3 Minimum Lubricant Qualities Required

CAUTION: Do not mix lubricants of a different chemical base. Mixing lubricant bases may cause lubricant properties to be ineffective.

CAUTION: Do not add a different lubricant to an actuator unless it consists of the same soap base as the existing lubricant unless you have received lubricant manufacturer approval.

The standard lubricants used by Limitorque have been proven to be extremely reliable over the years of service. Other lubricants may be used in place of the standard. **Limitorque does require the following lubricant qualities as a minimum.**

The lubricant must:

- contain an “EP”additive.
- be suitable for the temperature range intended.
- be water and heat-resistant and non-separating.
- not create more than 8% swell in Buna N or Viton.
- not contain any grit, abrasive, or fillers.
- comply with Slump-prefer NLGI grades 00 to 1.
- not be corrosive to steel gears, ball or roller bearings, or yellow metals (bronze, brass, or copper alloys).
- have a dropping point above 316˚F (158˚C) for temperature ranges of -20˚F (-29˚C) to 150˚F (66˚C).

7 SMB Disassembly and Reassembly

7.1 SMB-000

⚠ WARNING: See Section 4.1 and 4.2 on Safety Precautions and Safety Practices before proceeding with disassembly.

7.1.1 SMB-000 Disassembly

Piece numbers refer to **Figures 7.1-7.2**.

1. Verify power to actuator is OFF.
2. Remove or swing open the **Limit Switch Compartment Cover** (piece #3).
3. Disconnect the leads from the **Geared Limit Switch** (piece #94) and the **Torque Switch** (piece #93). Verify the leads are marked for reconnecting to the terminals.
4. Remove the two screws each on the **Geared Limit Switch** and the **Torque Switch**. Remove the **Geared Limit Switch** and the **Torque Switch**.
5. Remove the motor leads from the **Motor Terminal** (piece #91) inside the limit switch compartment. Remove the **Motor Assembly** (piece #92) and guide the motor leads through the conduit opening.

NOTE: The **Motor Pinion** (piece #20) is keyed to the motor shaft and held there with a set screw to retain the **Motor Pinion** in its proper position.

6. Depress **Declutch Lever** (piece #7) to put the actuator in manual operation.
7. Remove **Declutch Lever**.
8. Remove **Spring Cartridge Cap Cover** (piece #43).
9. Remove **Spring Cartridge Cap** (piece #2).
10. Pull the **Worm** (piece #24) and Torque Spring Assembly directly out.
11. Remove **Tripper Lever** (piece #15) assembly .

NOTE: A hex head cap screw locates and secures the **Tripper Lever** (piece #15) on the **Declutch Shaft** (piece #15) (end of shaft should be flush with tripper lever).

12. Remove **Housing Cap** (piece #6) and **Handwheel Assembly** (piece #5).
13. Remove **Drive Sleeve Assembly** completely including pieces #8, 10, 11, 17, 30, 33, 34, 50, 67, and 69. Press off the lower drive sleeve **Roller Bearing Cone** (piece #67). Slide off all remaining pieces.
14. Remove **Worm Shaft Gear** (piece #22). Remove **Flexloc Nut** (piece #77).
15. Remove **Tripper Cam** (piece #27) and **Cam Spacers** (pieces #31 and 37).
16. Remove **Worm Shaft** (piece #21) and **Worm Shaft Bearing Cap** (piece #4).
17. Remove internal **Retaining Ring** (piece #74). Remove **Worm** (piece #24) from worm assembly.
18. Remove the **Flexloc Nut** (piece #78), noting the number of turns to remove. Remove **Belleville Spring** (piece #49).
19. Remove **Thrust Washer** (piece #41), **Belleville Spring** (piece #49), and **Thrust Collar** (piece #42). Note the orientation for the Belleville Springs, spacers, and thrust washers.
20. Remove the **Retaining Ring** (piece #75) from the side of the actuator opposite the motor. Pull the **Declutch Shaft** (piece #40) and the **Declutch Fork** (piece #9) out of the actuator from the motor side of the actuator.

7.1.2 SMB-000 Reassembly

CAUTION: Read gasket instructions before replacing gaskets.

To reassemble, follow the disassembly procedure in the reverse order noting the following:

- Step 20 of Disassembly procedure—orient the **Declutch Fork** (piece #9) on the **Declutch Shaft** (piece #40) as shown in **Figures 7.1** and **7.2**.
- Step 19 of Disassembly procedure—reinstall **Thrust Washer** (piece #41), **Thrust Collar** (piece #42), **Belleville Springs** (piece #49), and spacers exactly as removed.
- Step 18 of Disassembly procedure—replace **Flexloc Nut** (piece #78) with the exact number of turns used to remove.

Adjust Clutch Trippers

1. Loosen lock screw on **Tripper Adjustment Arm** (piece #26).
2. Hold down **Declutch Lever** (piece #7). Lift **Tripper Adjustment Arm** up to touch **Trippers** (pieces #28 and 29). Tighten lock screw on **Tripper Adjustment Arm**.
3. Rotate **Worm Shaft Gear** (piece #22) to ensure actuator shifts into motor operation automatically.
4. Declutch actuator again and repeat Step 3.

7.1.3 To Replace the Stem Nut Only

⚠ WARNING: Do not remove the Locknut (piece #30) with actuator under load or with the valve under pressure.

CAUTION: If valve must be left in service while the stem nut is replaced, the valve stem must be locked in such a way as to prevent any movement of the valve stem.

1. Remove **Locknut** (piece #30). The locknut is staked in two places; locate the stakes and spot with a drill.
2. Clean all metal particles.
3. Lift **Stem Nut** (piece #11) out of the top of the actuator.

If the actuator is mounted on a valve having a threaded stem and stem nut removal is required, proceed as follows:

1. Remove the **Locknut** (piece #30).
2. Rotate the **Handwheel** (piece #5) to close the valve.
3. When the stem nut splines are free from the **Drive Sleeve** (piece #8), the **Stem Nut** may be rotated by hand for the remainder of the length of the valve stem and replaced, if necessary.

To reinstall the **Stem Nut** onto the **Keyed Shaft**:

1. Lower the **Stem Nut** into the **Drive Sleeve** , aligning the splines, until the **Stem Nut** is seated.
2. Install the **Key**.
3. Install the **Locknut**.
4. Stake in two (2) places, 180˚ apart.

To reinstall the **Stem Nut** onto a **Threaded Shaft**:

1. Rotate the **Stem Nut** on the shaft until the **Stem Nut** splines engage the **Drive Sleeve** splines.
2. Rotate the **Handwheel** to open the valve until the **Stem Nut** is seated.
3. Install the **Locknut**.
4. Stake the top threads in two (2) places, 180˚ apart.

7.1.4 Gasket Instructions

All gaskets **except** the housing cover gasket are 1/32" thick ASTM F104 synthetic fiber.

The housing gaskets vary in thickness. To determine the correct size, proceed as follows:

1. Clean the **Housing Cap** (piece #6) and main **Housing** (piece #1) gasket surface.
2. Install the actuator **Drive Sleeve Assembly**, including the **Bearings**.
3. Install the **Housing Cap** and measure the gap between the **Housing Cap** and the main **Housing**.
4. Take measurement and add 10%. Use the closest nominal gasket thickness or combination available.

Figure 7.1 – SMB-000 Parts Diagram - Side View

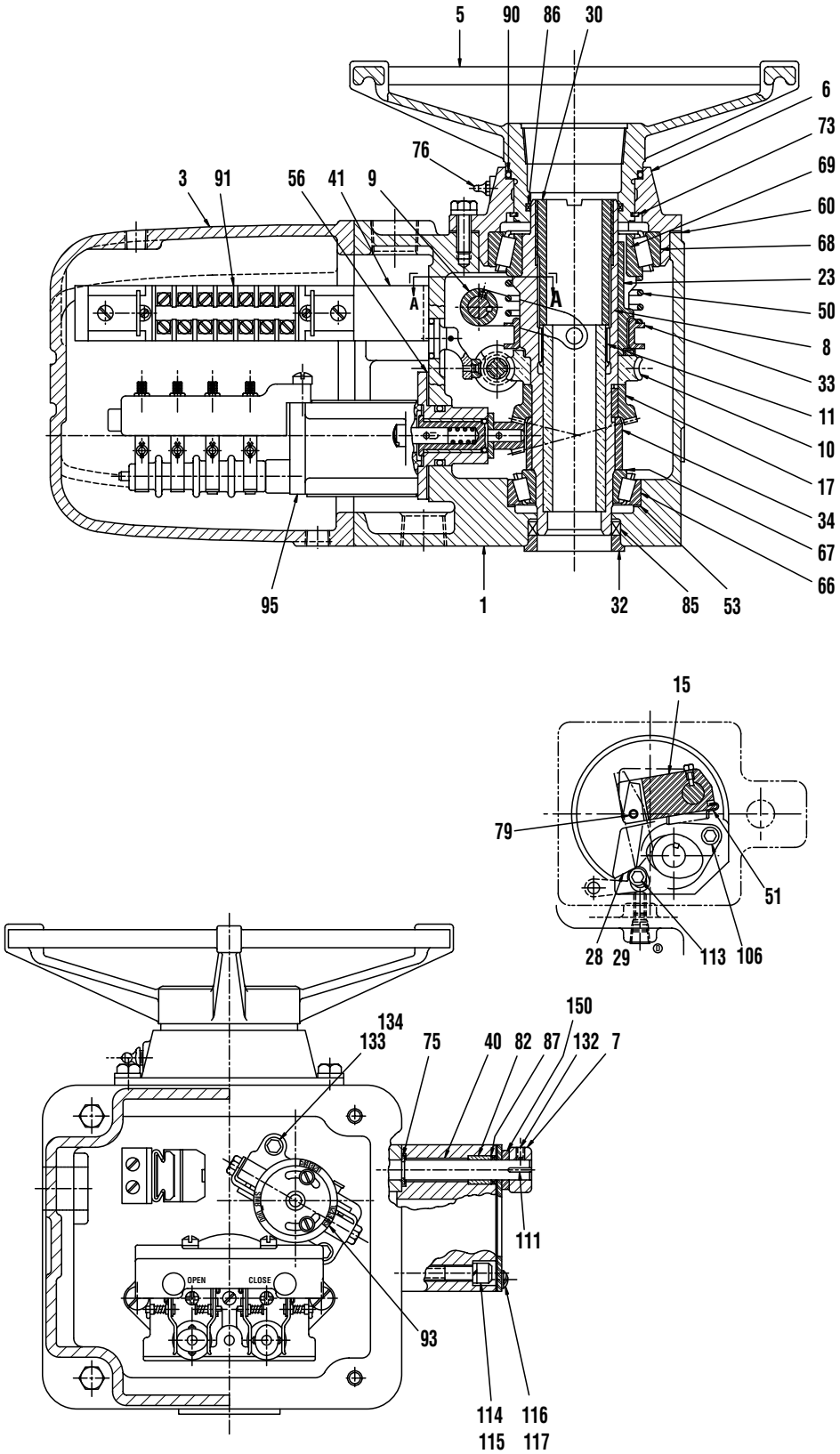

01-403-0034-3

Figure 7.2 – SMB-000 Parts Diagram - Top View

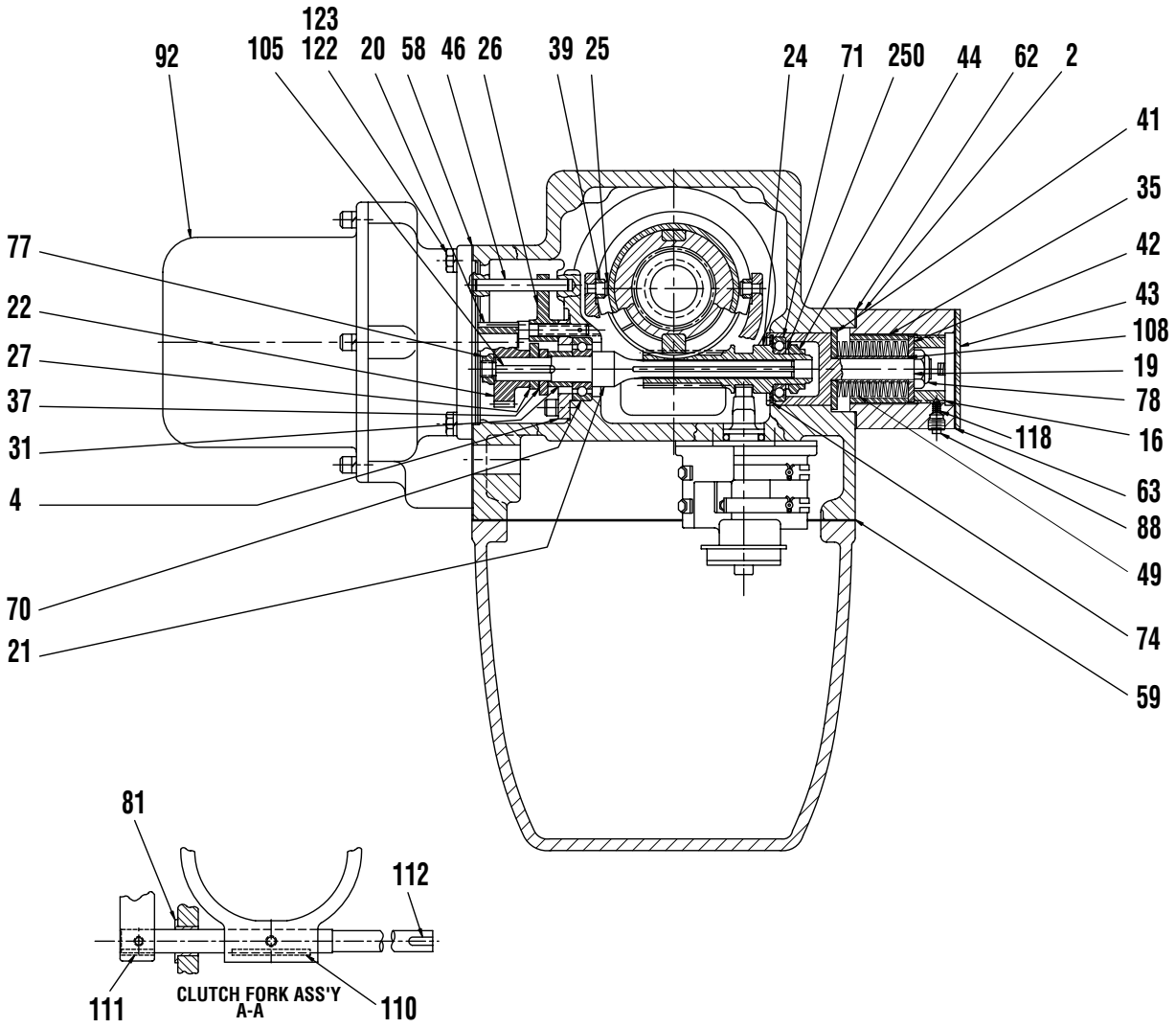

01-403-0033-4

Figure 7.3 – SMB-000 Exploded View

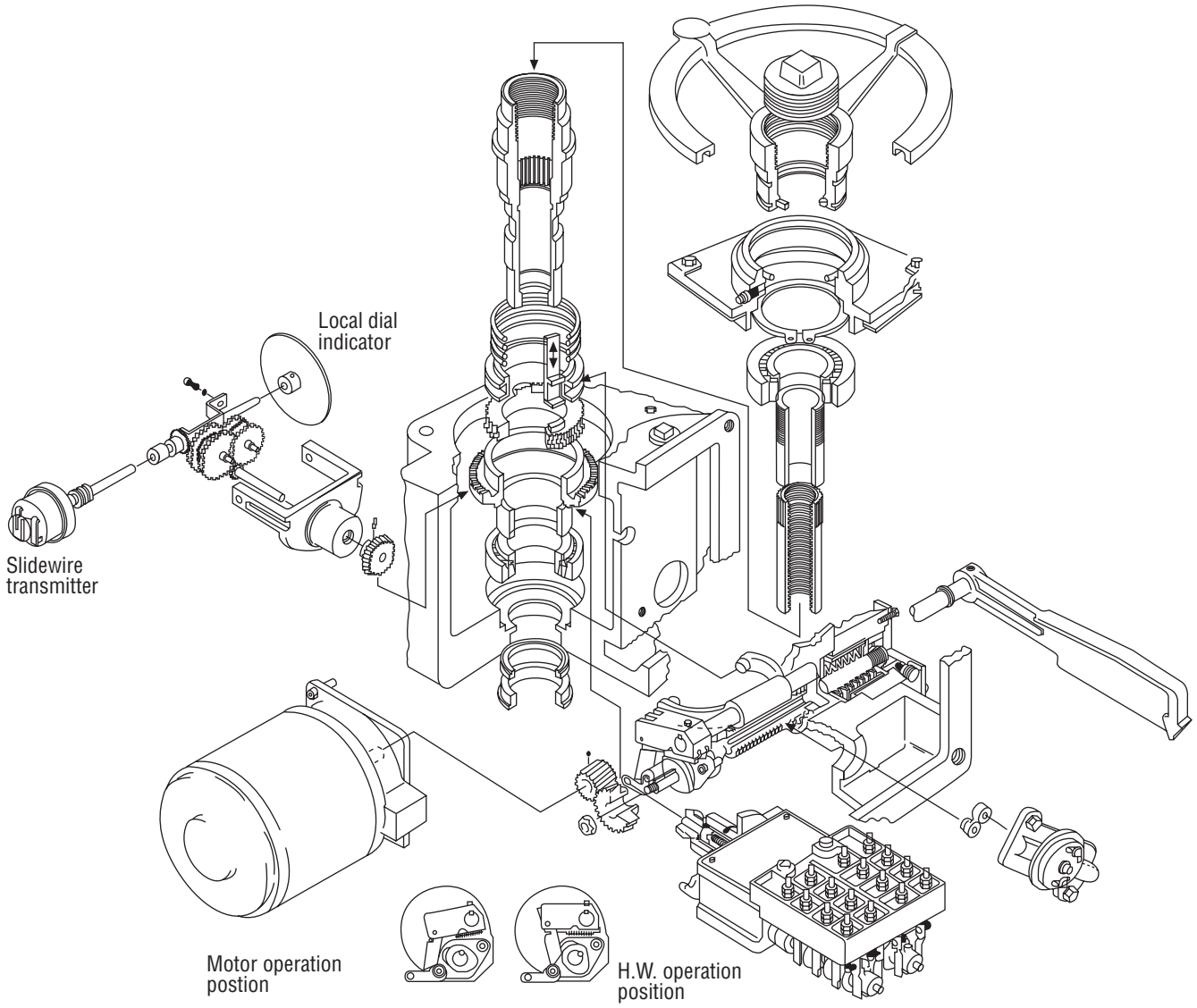

08-403-0001-4

Table 7.1 – SMB-000 Parts List

Piece	Quantity	Description
1	1	Housing
2	1	Spring Cartridge Cap
3	1	Limit Switch Compartment Cover
4	1	Worm Shaft Bearing Cap
5	1	Handwheel
6	1	Housing Cap
7	1	Declutch Lever
8	1	Drive Sleeve
9	1	Declutch Fork
10	1	Worm Gear
11	1	Stem Nut
14	1	Spacer (Deleted in 1975. Use piece #87)
15	1	Tripper Lever
16	1	Declutch Shaft Spacer Locknut
17	1	Drive Sleeve Bevel Gear
19	1	Bearing Cartridge
20	1	Motor Pinion
21	1	Worm Shaft
22	1	Worm Shaft Gear
23	1	Clutch Key
24	1	Worm
25	1	Clutch Roller Pin
26	1	Tripper Adjustment Arm
27	1	Tripper Cam
28	1	Tripper #1
29	1	Tripper #2
30	1	Locknut
31	1	Cam Spacer
32	1	Seal Cap
33	1	Clutch Ring
34	1	Spacer
35	1	Torque Limit Sleeve
37	1	Cam Spacer
39	1	Clutch Roller
40	1	Declutch Shaft
41	1	Thrust Washer
42	1	Thrust Collar
43	1	Spring Cartridge Cap Cover
44	1	Worm Bearing Nut
45	1	Terminal Mounting Bracket (not shown)
46	1	Adjustable Arm Pivot Pin
49	1	Belleville Spring (Disc Spring)
50	1	Clutch Compression Spring
51	1	Tripper Spring
53	1	Bearing Shim
56	1	Shim Geared Limit Switch Cartridge Assembly
58	1	Gasket (Motor)
59	1	Gasket (Limit Switch Compartment.)
60	1	Gasket (Housing Cap)

Table 7.1 – SMB-000 Parts List (continued)

Piece	Quantity	Description
62	1	Gasket (Spring Cartridge Cover)
63	1	Gasket (Spring Cartridge Cap)
66	1	Roller Bearing Cup
67	1	Roller Bearing Cone
68	1	Roller Bearing Cup
69	1	Roller Bearing Cone
70	1	Ball Bearing
71	1	Ball Bearing
73	1	Retaining Ring
74	1	Retaining Ring
75	1	Retaining Ring
76	1	Grease Fitting
77	1	Flexloc Nut
78	1	Flexloc Nut
79	1	Roll Pin
81	1	Bushing
82	1	Bushing
85	1	Quad Ring
86	1	Quad Ring
87	1	Quad Ring
88	1	Pipe Plug 1/8”
90	1	O-Ring
91	1	Terminal Motor
92	1	Motor Assembly
93	1	Torque Switch
94	1	Geared Limit Switch
105	1	Key
106	1	Socket Head Cap Screw
108	1	Guide Sleeve
110	1	Key
111	1	Key
112	1	Key
113	1	Socket Head Cap Screw
114	1	Socket Head Cap Screw
115	1	Lockwasher
116	1	Round Head Machine Screw
117	1	Lockwasher
118	1	Socket Head Set Screw
122	4	Hex Head Cap Screw
123	4	Lockwasher
132	1	Socket Head Set Screw
133	2	Socket Head Cap Screw
134	2	Lockwasher
150	1	Declutch Shaft Spacer
250	1	Shim

7.2 SMB-00

⚠ WARNING: See Section 4.1 and 4.2 on Safety Precautions and Safety Practices before proceeding with disassembly.

7.2.1 SMB-00 Disassembly

Piece numbers refer to **Figure 7.4** to **7.7**.

1. Verify power to the actuator is OFF.
2. Remove or swing open the **Limit Switch Compartment Cover** (piece #2).
3. Disconnect the leads of the **Geared Limit Switch** (piece #85) leads and the **Torque Switch** (piece #83). Verify the leads are marked for reconnecting to the terminals.
4. Remove the two screws each on the **Geared Limit Switch** and the **Torque Switch**. Remove the **Geared Limit Switch** and the **Torque Switch**.
5. Disconnect the motor leads inside the limit switch compartment. Remove the **Motor Assembly** (piece #84) and guide the motor leads through the conduit opening.

NOTE: The **Motor Pinion** (piece #20) is keyed to the motor shaft and held there with a set screw to retain the pinion in its proper position.

6. Depress **Declutch Lever** (piece #5) to put the actuator in manual operation.
7. Remove **Declutch Lever**.
8. Remove **Spring Cartridge Cap Cover** (piece #25).
9. Remove **Spring Cartridge Cap** (piece #3).
10. Pull the **Worm** (piece #19) and **Belleville Spring** assembly (piece #46) directly out.
11. Remove **Tripper Lever** (piece #10) assembly.

NOTE: A hex head cap screw locates and secures the **Tripper Lever** on the **Declutch Shaft** (piece #34) (end of shaft should be flush with tripper lever).

12. For the top-mounted handwheel, remove the **Housing Cover** (piece #88) and the **Handwheel** (piece #89) assembly.
13. For the side-mounted handwheel, remove the **Bevel Gear Housing** (piece #96) and the entire handwheel assembly—including the **Bevel Gear Cartridge** (piece #98).
14. Remove the **Drive Sleeve Assembly** completely, including pieces #4, 7, 8, 12, 14, 28, 29, 30, 43, 64, and 66. Press off the **Lower Roller Bearing Cone** (piece #66). Slide off all remaining pieces except **Geared Limit Drive Hypoid Gear** (piece #12) and **Roller Bearing Cone** (piece #64).
15. Remove the **Locknut** (piece #73) and remove the **Worm Shaft Gear** (piece #18).
16. Remove the **Tripper Cam** (piece #24), **Bearing Spacer** (piece #31), and **Cam Spacers** (piece #36).
17. Remove the **Worm Shaft** (piece #17) and **Worm Shaft Bearing Cap** (piece #35).
18. Remove the internal **Retaining Ring** (piece #71). Remove **Worm** (piece #19) from worm assembly.
19. Remove the **Locknut** (piece #74) counting the number of turns needed to remove, and **Belleville Spring** (piece #46).

NOTE: Count the number of turns to remove the **Locknut**. Needed for reassembly.

20. Remove the **Thrust Washer** (piece #39), **Torque Limit Sleeve** (piece #32), **Belleville Spring** (piece #46), and **Thrust Washer** (piece #38). Note the orientation for the torque spring discs, spacers, and thrust washers.
21. Remove the **Retaining Ring** (piece #70) on the opposite side of the actuator from the motor. Pull the **Declutch Shaft** (piece #34) and the **Declutch Fork** (piece #6) out of the actuator from the motor side of the actuator.
22. Press off the **Upper Roller Bearing Cone** (piece #64). Slide the **Geared Limit Drive Hypoid Gear** (piece #12) off the **Drive Sleeve** (piece #4).

7.2.2 SMB-00 Reassembly

CAUTION: Read gasket instructions before replacing gaskets.

To reassemble, follow the disassembly procedure in the reverse order, noting the following:

- Step No. 21 of Disassembly procedure—orient the **Declutch Fork** (piece #6) on the **Declutch Shaft** (piece #34) as shown in **Figure 7.3** (exploded view).
- Step No. 20 of Disassembly procedure—reinstall **Thrust Washers** (pieces #38 and 39), **Belleville Spring** (piece #46), and spacers exactly as removed.
- Step No. 19 of Disassembly procedure—replace **Locknut** (piece #74) with the exact number of turns used to remove.
- Step No. 7 of Disassembly procedure—manually declutch unit and rotate **Worm Shaft Gear** (piece #18).

Adjust Clutch Trippers

1. Loosen the lock screw on the **Tripper Adjustment Arm** (piece #21).
2. Hold down the **Declutch Lever** (piece #5).
3. Lift the **Tripper Adjustment Arm** up to touch the **Trippers** (pieces #26 and 27). Tighten the lock screw on the **Tripper Adjustment Arm**.
4. Rotate the **Worm Shaft Gear** (piece #18) to ensure actuator shifts into motor operation automatically.
5. Declutch the actuator again and repeat Step 3.

7.2.3 To Replace the Stem Nut Only

▲ WARNING: Do not remove the locknut (piece #30) with the actuator under load or with valve under pressure.

CAUTION: If valve must be left in service while the stem nut is replaced, the valve stem nut must be locked in such a way as to prevent any movement of the valve stem.

1. Remove the **Locknut** (piece #30). The locknut is staked in two places; locate the stakes and spot with a drill.
2. Clean all metal particles.
3. Lift the **Stem Nut** (piece #8) out of the top of the actuator.

If the actuator is mounted on a valve having a threaded stem, and stem nut removal is required, proceed as follows:

1. Remove the **Locknut** (piece #30).
2. Rotate the **Handwheel** (piece #89) to close the valve.
3. When the stem nut splines are free from the **Drive Sleeve** (piece #4), the **Stem Nut** may be rotated by hand for the remainder of the length of the valve stem and replaced, if necessary.

To re-install the **Stem Nut** onto the **Keyed Shaft**:

1. Lower the **Stem Nut** into the **Drive Sleeve**, aligning the splines, until the **Stem Nut** is seated.
2. Install the **Key**.
3. Install the **Locknut**.
4. Stake in two (2) places, 180° apart.

To reinstall the **Stem Nut** onto a **Threaded Shaft**:

1. Rotate the **Stem Nut** on the shaft until the **Stem Nut** splines engage the **Drive Sleeve** splines.
2. Rotate the **Handwheel** to open the valve until the **Stem Nut** is seated.
3. Install the **Locknut** .
4. Stake the top threads in two (2) places, 180˚ apart.

7.2.4 Gasket Instructions

All gaskets **except** the housing cover gasket are 1/32" thick ASTM F104 synthetic fiber. The housing gaskets vary in thickness. To determine the correct size, proceed as follows:

1. Clean the **Housing Cover** (piece #88) and the main **Housing** (piece #1) gasket surface.
2. Install the unit **Drive Sleeve Assembly**, including the **Bearings**.
3. Install the **Housing Cover** and measure the gap between the **Housing Cover** and the main **Housing**.
4. Take measurement and add 10%. Use the closest nominal gasket thickness or combination available.

Figure 7.4 – SMB-00 Parts Diagram – Motor End View

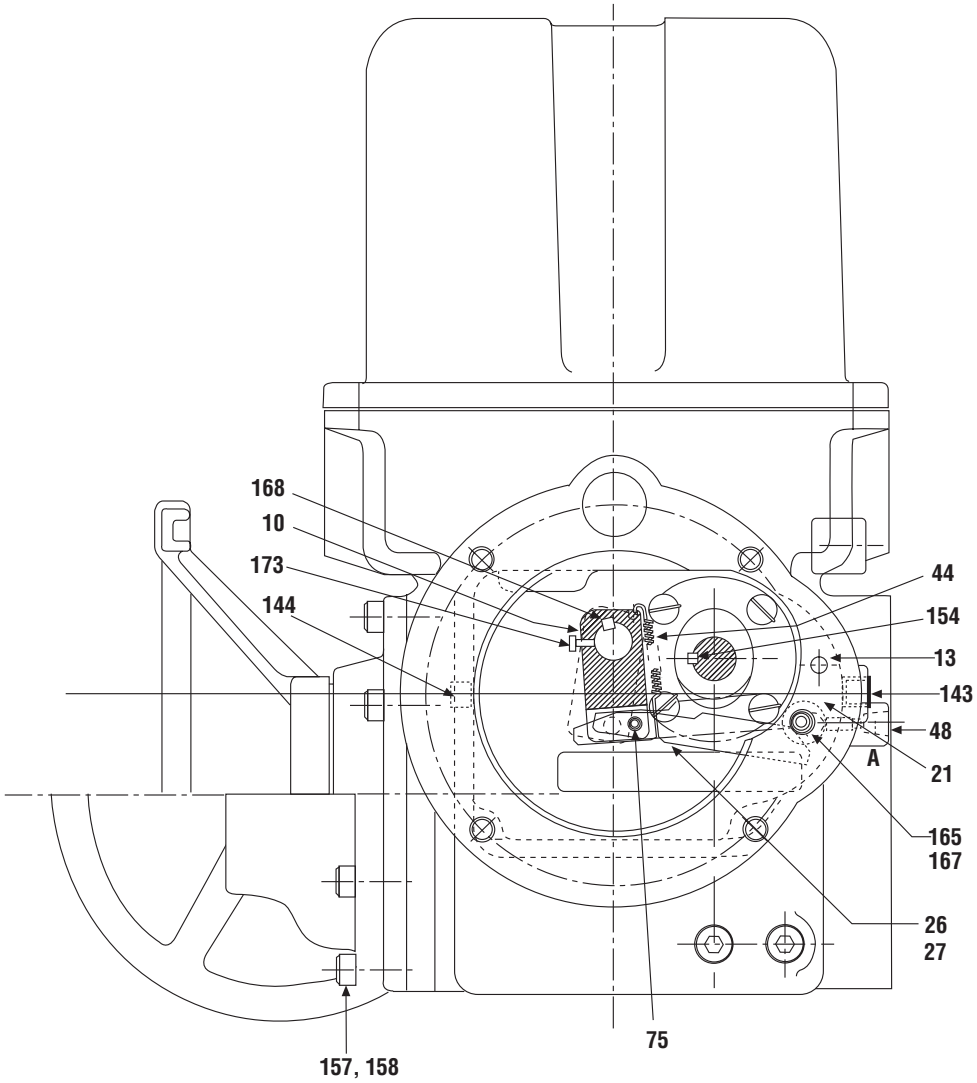

01-403-0090-4

Figure 7.5 – SMB-00 Parts Diagram – Top View

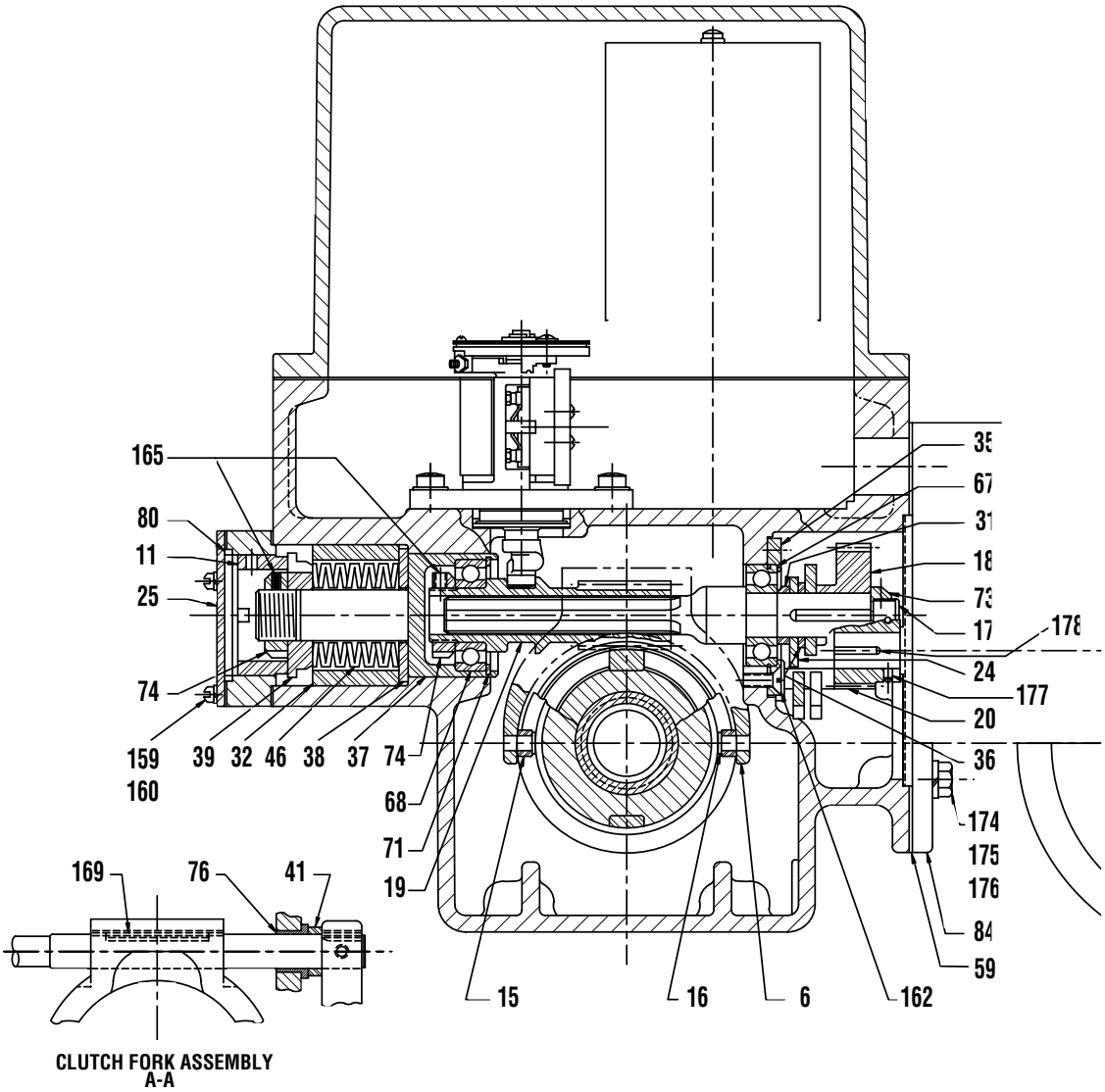

01-403-0090-4

Figure 7.6 – SMB-00 Parts Diagram – Side View

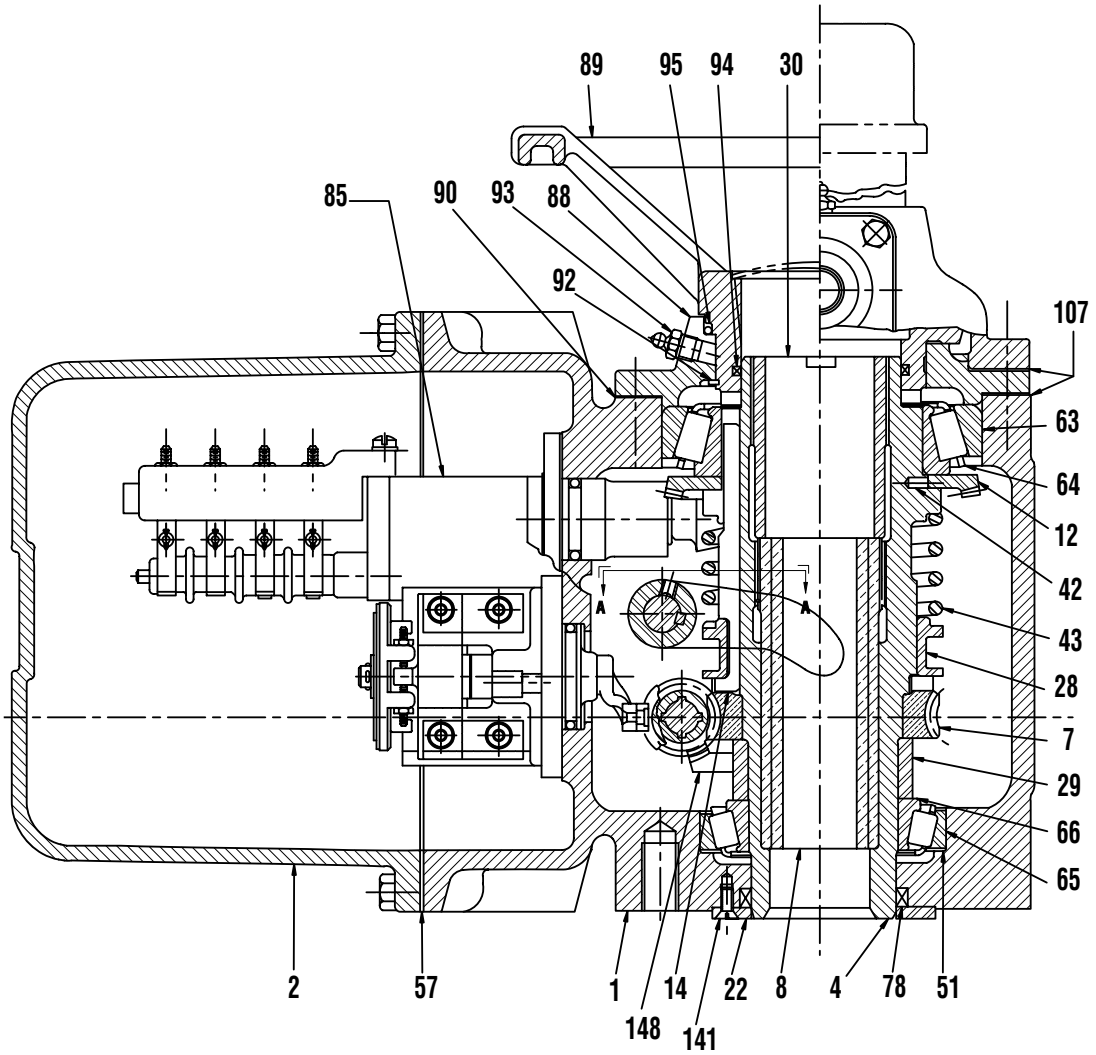

01-403-0121-4

Figure 7.7 – SMB-00 Parts Diagram – Side Mounted Handwheel Detail

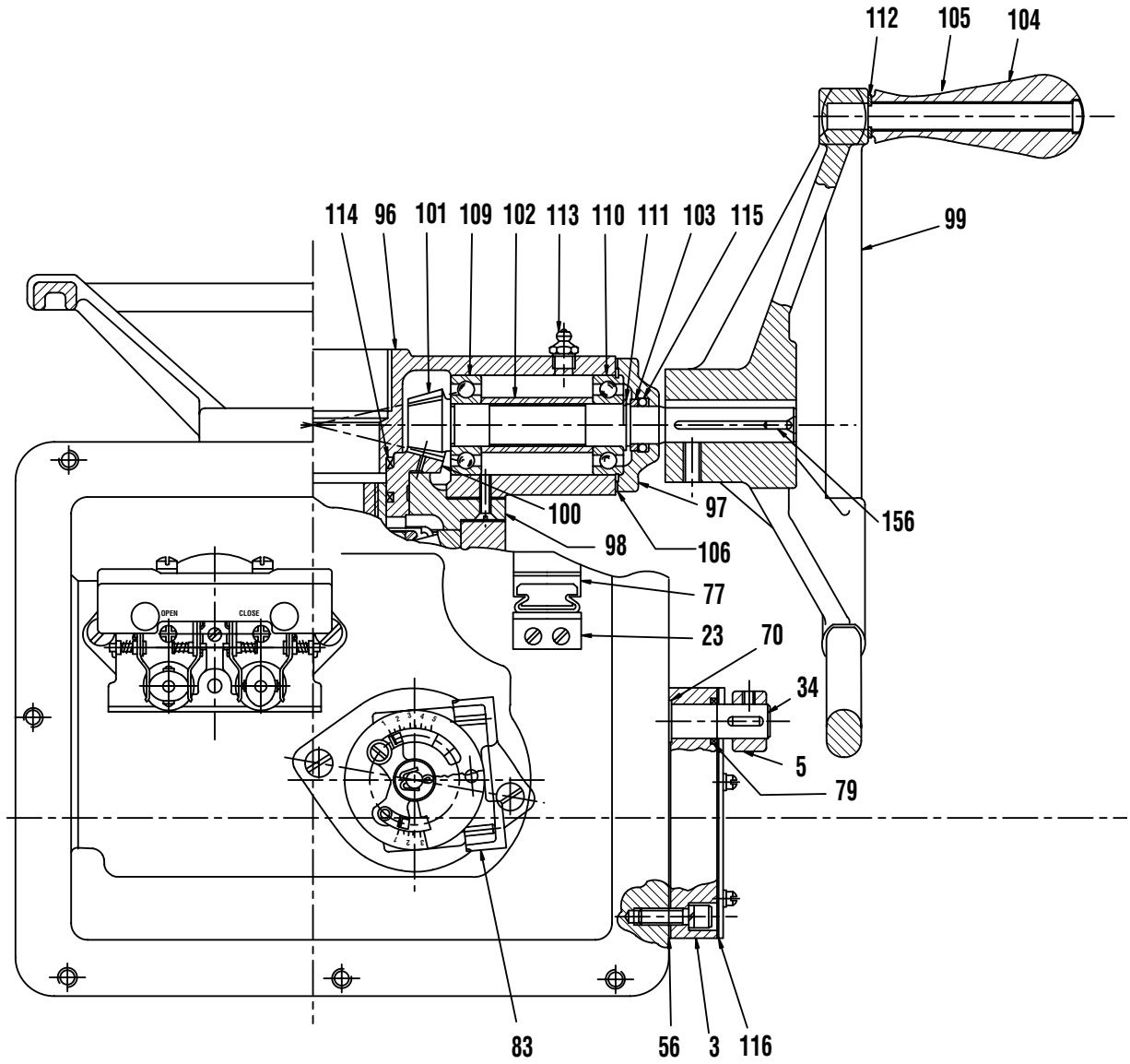

01-403-0121-4

Figure 7.8 – SMB-00 Exploded View

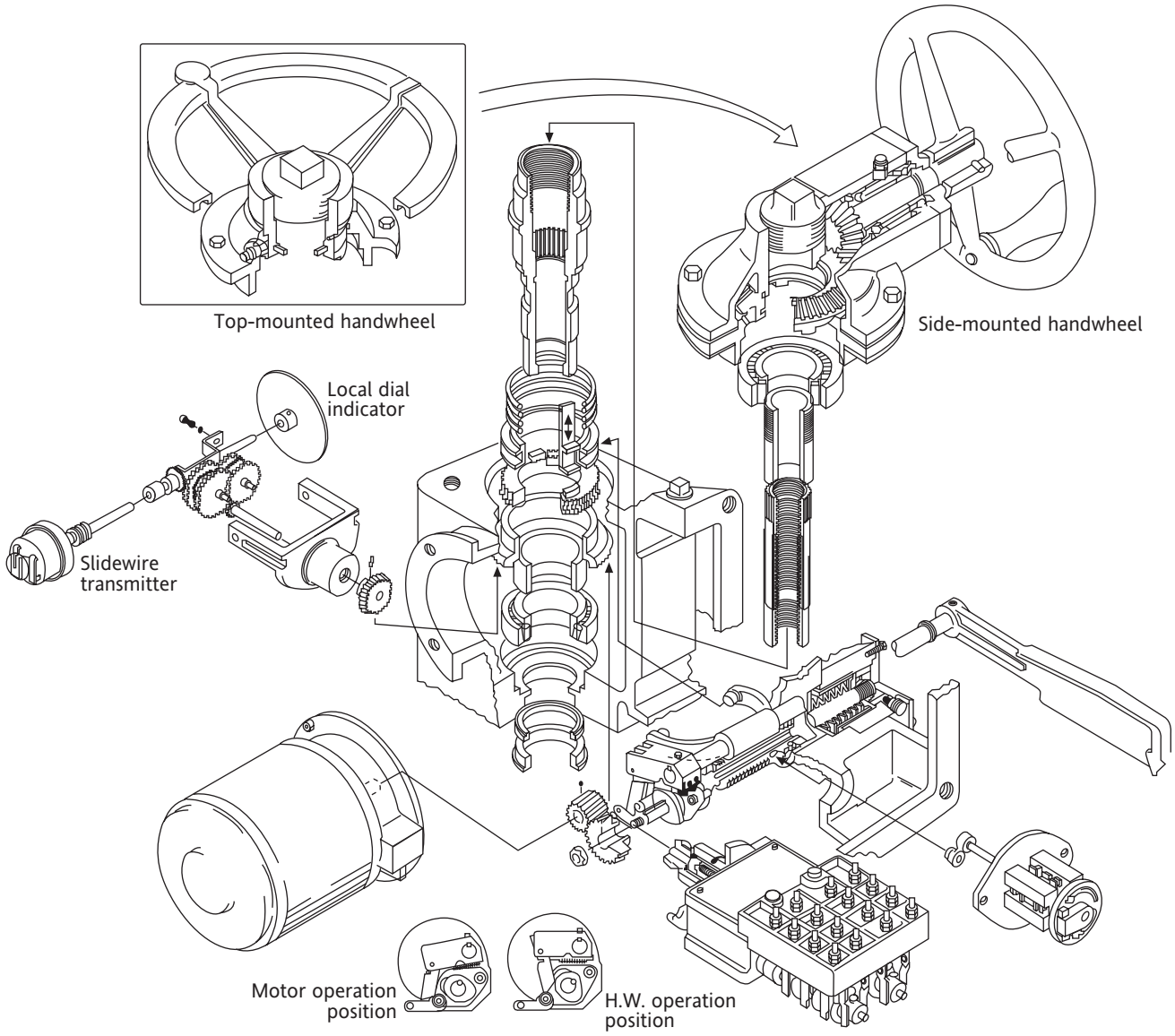

08-403-0002-4

Table 7.2 – SMB-00 Parts List

Piece	Quantity	Description
1	1	Housing
2	1	Limit Switch Compartment Cover
3	1	Spring Cartridge Cap
4	1	Drive Sleeve
5	1	Declutch Lever
6	1	Declutch Fork
7	1	Worm Gear
8	1	Stem Nut
10	1	Tripper Lever
11	1	Locknut
12	1	Geared Limit Drive Hypoid Gear
13	1	Tripper Adjustment Arm Pin
14	1	Clutch Key
15	1	Clutch Fork Roller
16	1	Clutch Roller Pin
17	1	Worm Shaft
18	1	Worm Shaft Gear
19	1	Worm
20	1	Motor Pinion
21	1	Tripper Adjustment Arm
22	1	Seal Retainer Plate
23	1	Terminal Bracket
24	1	Tripper Cam
25	1	Spring Cartridge Cap Cover
26	1	Tripper #1
27	1	Tripper #2
28	1	Clutch Ring
29	1	Worm Gear Spacer
30	1	Locknut
31	1	Bearing Spacer
32	1	Torque Limit Sleeve
34	1	Declutch Shaft
35	1	Worm Shaft Bearing Cap
36	1	Cam Spacer
37	1	Bearing Cartridge
38	1	Thrust Washer
39	1	Thrust Washer
41	1	Tripper Lever Spacer
42	1	Dowel Pin
43	1	Clutch Compression Spring
44	1	Tripper Spring
46	1	Belleville Springs
51	1	Bearing Shims
56	1	Spring Cartridge Cap Gasket
57	1	Limit Switch Compartment Cover Gasket
59	1	Motor Adapter Gasket
63	1	Roller Bearing Cup
64	1	Upper Roller Bearing Cone
65	1	Roller Bearing Cup

Table 7.2 – SMB-00 Parts List (continued)

Piece	Quantity	Description
66	1	Lower Roller Bearing Cone
67	1	Ball Bearing
68	1	Ball Bearing
70	1	Retaining Ring
71	1	Retaining Ring
73	1	Locknut
74	1	Locknut
75	1	Roll Pin
76	1	Bushing
77	1	Motor Terminal Block
78	1	Quad Ring
79	1	Quad Ring
80	1	O-Ring
83	1	Torque Switch
84	1	Motor Assembly
85	1	Geared Limit Switch
88	1	Housing Cover
89	1	Handwheel
90	1	Housing Cover Gasket
92	1	Retaining Ring
93	1	Grease Fitting
94	1	Quad Ring
95	1	O-Ring
96	1	Bevel Gear Housing
97	1	Bevel Pinion Cap
98	1	Bevel Gear Cartridge
99	1	Handwheel
100	1	Bevel Gear
101	1	Handwheel Bevel Pinion
102	1	Bearing Spacer
103	1	O-Ring Spacer
104	1	Handle
105	1	Handle Rod
106	1	Bevel Pinion Cap Gasket
107	1	Housing Cover Gasket
109	1	Ball Bearing
110	1	Ball Bearing
111	1	Retaining Ring
112	1	Retaining Ring
113	1	Grease Fitting
114	1	Quad Ring
115	1	O-Ring
116	1	O-Ring
141	1	Flat Head Machine Screw
143	1	Pipe Plug
144	1	Pipe Plug
148	1	Drive Sleeve Bevel Gear
154	1	Socket Head Cap Screw
156	1	Key

Table 7.2 – SMB-00 Parts List (continued)

Piece	Quantity	Description
157	1	Socket Head Cap Screw
158	1	Lockwasher
159	1	Lockwasher
160	1	Round Head Machine Screw
162	1	Flat Head Socket Cap Screw
165	1	Socket Head Set Screw
167	1	Lockwasher
168	1	Key
169	1	Key
173	1	Hex Head Cap Screw
174	1	Stud
175	1	Hex Nut
176	1	Lockwasher
177	1	Socket Head Set Screw
178	1	Key

7.3 SMB-0, 1, 2, 3, 4, and 4T

⚠ WARNING: See Section 4.1 and 4.2 on Safety Precautions and Safety Practices before proceeding with disassembly.

7.3.1 SMB-0, 1, 2, 3, 4, and 4T Disassembly

Piece numbers refer to **Figures 7.9** to **7.11**.

1. Verify power to the actuator is OFF.
2. Remove or swing open the **Limit Switch Compartment Cover** (piece #6).
3. Disconnect the **Geared Limit Switch** (piece #105) leads and the **Torque Switch** (piece #104) leads. Verify the leads are marked for reconnecting to the terminals.
4. Remove the two screws each on the geared limit switch and the torque switch. Remove the **Geared Limit Switch** and the **Torque Switch**.
5. Disconnect the motor leads inside the limit switch compartment. Remove the **Motor** (piece #103) and guide the motor leads through the conduit opening.

NOTE: The **Motor Pinion** (piece #40) is keyed to the motor shaft and held there with a set screw and lockwire to retain the pinion in its proper position. The motor pinion should be shouldered on the motor shaft.

6. Depress **Declutch Lever** (piece #10) to put the actuator in manual operation.
7. Loosen set screw and pull **Handwheel** (piece #5) and **Spacer** (piece #201) from **Handwheel Shaft** (piece #25).
8. Loosen set screw and slide **Declutch Lever** (piece #10) from **Declutch Shaft** (piece #24).
9. Remove **Spring Cartridge Cap** (piece #4).

CAUTION: The Declutch lever shaft must be held in position and not allowed to be pulled out when removing the spring cartridge cap. A loud snap will be heard on removal of this end cap—this is the sound of the Torsion Spring (piece #54) being released. Do not be alarmed. Later models have declutch lever shaft held in place by a snap ring located behind the Declutch Link (piece #9).

10. Temporarily replace the **Handwheel** (piece #5) and rotate in the close direction to cause the **Worm** (piece #53) to screw out of engagement with **Worm Gear** (piece #16) and to cause **Torque Spring** assembly (pieces #29, 44, 45, 48, 56) to emerge from the **Housing** (piece #2). Remove **Worm** and **Torque Spring** assembly completely.

NOTE: The cartridge may be further disassembled—remove **Elastic Stop Nut** (piece #85), noting the number of turns to remove.

---

11. Remove **Housing Cover** (piece #3).
12. Remove **Drive Sleeve Assembly** completely from the actuator **Housing** (piece #2). The drive sleeve assembly consists of **Locking Nut** (piece #30), **Stem Nut** (piece #20), **Drive Sleeve** (piece #11), **Upper Thrust Bearings** (piece #77 and 78), **Worm Gear** (piece #16), **Worm Gear Spacer** (piece #28), and Lower **Roller Bearing Cone** (piece #75). Press off the Lower **Roller Bearing Cone** (piece #75) to further dismantle the drive sleeve assembly.
13. Remove **Retaining Ring** (piece #89), **Split Ring Retainer** (piece #27), and **Split Ring** (piece #47). Pull the **Worm Shaft Clutch Gear** (piece #41) from the **Worm Shaft** (piece #43).
14. Remove **Clutch Gear Spacer** (piece #46)—only on SMB-0 and SMB-1.
15. Spread **Clutch Trippers** (piece #32) with a tool to shift the actuator into motor operation.

CAUTION: Do not use hands. Spring forces could cause personal injury.

---

16. Remove bolts holding **Clutch Housing** (piece #1) to **Housing** (piece #2). Withdraw **Clutch Housing** together with the **Trippers** (piece #32), and **Declutch Fork** (piece #12). **Worm Shaft Clutch** (piece #50) will slide off **Worm Shaft** (piece #43).
17. Slide **Fork Return Spring** (piece #58) off of **Worm Shaft** toward motor end. Slide **Declutch Link** (piece #9) off splined **Declutch Shaft** (piece #24). Remove **Retaining Ring** (piece #73).
18. Remove **Elastic Stop Nut** (piece #84) and remove **Handwheel Gear** (piece #7), which is keyed to the **Handwheel Shaft** (piece #25).
19. Remove bolts holding **Worm Shaft Bearing Cap** (piece #8) and slide cap off **Worm Shaft**. Remove **Retaining Ring** (piece #92), being careful not to lose **Handwheel Pinion Spring** (piece #57) and **Spring Ring** (piece #17). Remove **Handwheel Clutch Pinion** (piece #42).
20. Tap on the motor end of the shaft, which will free **Bearing** (piece #80) from **Housing** to remove handwheel shaft. **Handwheel Shaft** (piece #25) will break free from **Bearing** (piece #79). Remove **Handwheel Shaft** (piece #25) from **Housing**.
21. Withdraw **Declutch Shaft** (piece #24) from handwheel end of **Housing**.
22. Remove **Thrust Washers** (piece #48), **Torque Limit Sleeve** (piece #29), and **Belleville Springs** (piece #56).

NOTE: Note the orientation of the Belleville Springs for reassembly later.

---

23. Locate screw in threaded area of the **Bearing Cartridge Stem** (piece #45) and remove. Remove Bearing Cartridge Stem.
24. Remove the **Worm** (piece #53) and the **Ball Bearing** (piece #82).
25. Locate set screw in **Bearing Locknut** (piece #83). Remove set screw and **Bearing Locknut**. Remove the **Ball Bearing** (piece #82).

7.3.2 SMB-0, 1, 2, 3, 4, and 4T Reassembly

CAUTION: Read gasket instructions before replacing gaskets.

To reassemble, follow the disassembly procedure in the reverse order, noting the following:

- Step No. 22 of Disassembly procedure—stack **Belleville Springs** (piece #56), **Thrust Washers** (piece #48), and **Spacers** in the exact order as they were removed.

- Step No. 10 of Disassembly procedure—reinstall **Elastic Stop Nut** (piece #85) with the same number of turns as was used to remove.
- Step No. 17 of Disassembly procedure—align **Declutch Link** (piece #9) with **Declutch Lever** (piece #10) to assure correct lever positioning.
- Step No. 16 of Disassembly procedure—install the **Worm Shaft Clutch** (piece #50) with smaller set of lugs first to engage with lugs on **Handwheel Clutch Pinion** (piece #42).
- Step No. 10 of Disassembly procedure—rotate **Worm Shaft Clutch** (piece #50) to engage splines on **Worm Shaft** (piece #43) to replace **Worm** (piece #53). Replace **Declutch Lever** (piece #10) and **Handwheel** (piece #5) temporarily. Rotate handwheel in opposite direction used to remove **Worm** to place actuator in manual operation.
- Step No. 9 of Disassembly procedure—before replacing **Spring Cartridge Cap** (piece #4), align **Torsion Spring** (piece #54), which holds the **Declutch Lever** in its normal position. Remove **Declutch Lever** (piece #10) and replace **Spring Cartridge Cap** (piece #4), and **Spring Cartridge Plate with Gasket** (piece #71 and 72). Do not bolt tightly. Depress **Declutch Lever** into manual operation and, while holding down **Declutch Lever**, secure **Spring Cartridge Cap** (piece #4).
- Step No. 5 of Disassembly procedure—ensure the **Motor Pinion** (piece #40) is a tight fit on the motor shaft (preferably a light press fit).

NOTE: The SMB-0 **Motor Pinion** (piece #40) is installed with the set screw lockwire between the gear teeth and the motor flange. On the SMB-1 through 4, the gear teeth are between the set screw/lockwire and flange.

7.3.3 To Replace the Stem Nut Only

▲ WARNING: Do not remove the Locking Nut (piece #30) with the actuator under load or with valve under pressure.

CAUTION: If valve must be left in service while the stem nut is replaced, the valve stem must be locked in such a way as to prevent any movement of the valve stem.

1. Remove **Locking Nut** (piece #30). The locking nut is staked in two places; locate the stakes and spot with a drill.
2. Clean all metal particles.
3. Lift **Stem Nut** (piece #20) out of the top of the actuator.

If the actuator is mounted on a valve having a threaded stem, and stem nut removal is required, proceed as follows:

1. Remove **Locking Nut** (piece #30).
2. Rotate the **Handwheel** (piece #5) to close the valve.
3. When the stem nut splines are free from the **Drive Sleeve** (piece #11), the **Stem Nut** may be rotated by hand for the remainder of the length of the valve stem and replaced, if necessary.
4. On new stem nut, stake the top threads in two places. Install stem nut.

7.3.4 Gasket Instructions

All gaskets except the housing cover gasket are 1/32" thick ASTM F104 synthetic fiber.
The housing gaskets vary in thickness. To determine the correct size, proceed as follows:

1. Clean **Housing Cover** (piece #3) and main **Housing** (piece #2) gasket surface.
2. Install unit **Drive Sleeve** assembly, including the **Bearings** (pieces #11, 20, 30, 16, 28, 75-78).
3. Install **Housing Cover** and measure the gap between the **Housing Cover** and the main **Housing**.
4. Take measurement and add 10%. Use the closest nominal gasket thickness or combination available.

Figure 7.9 – SMB-0 through SMB-4 and 4T Parts Diagram – Top View

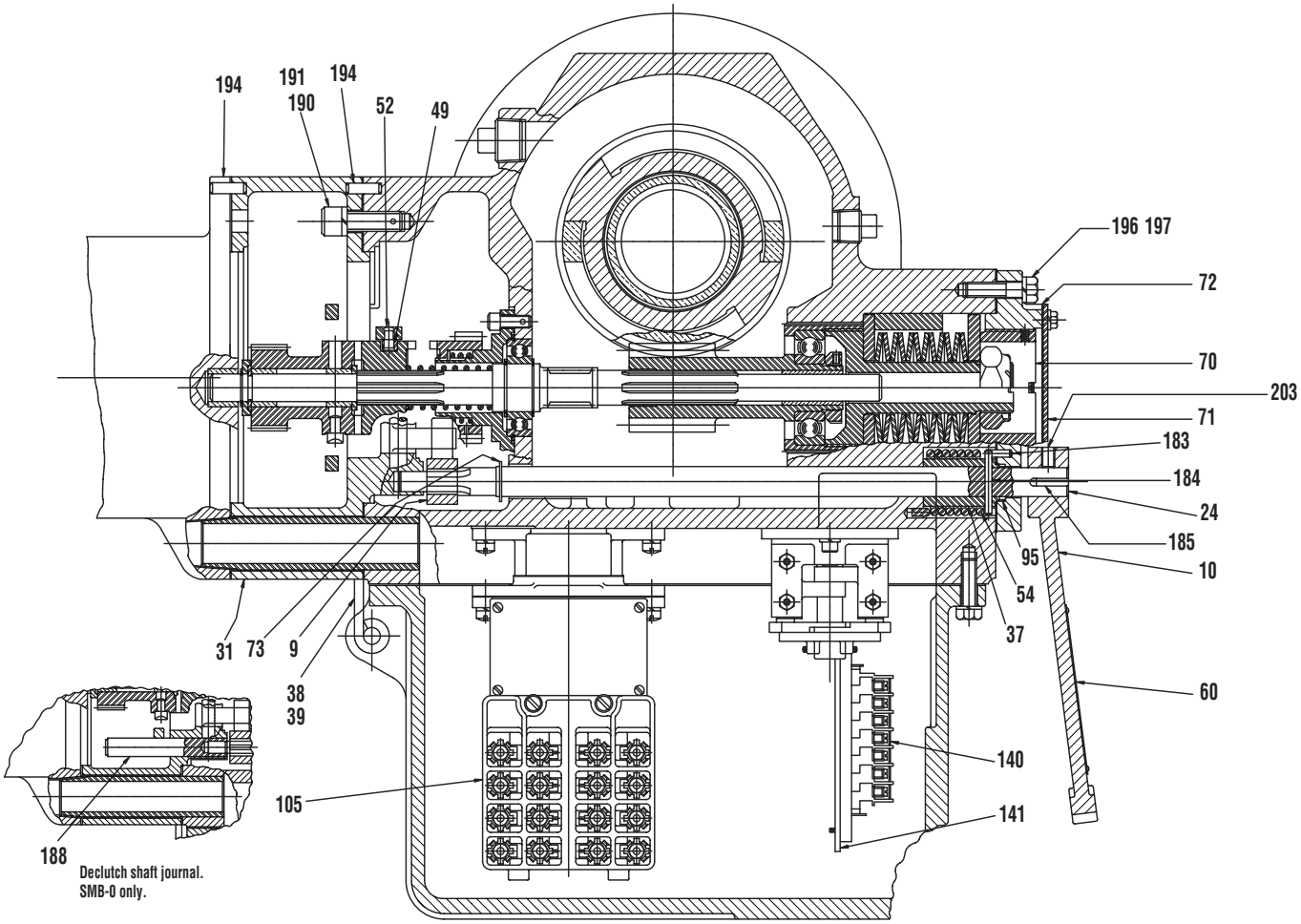

01-408-0073-4

Figure 7.10 – SMB-0 through SMB-4 and 4T Parts Diagram – Worm Shaft Side View

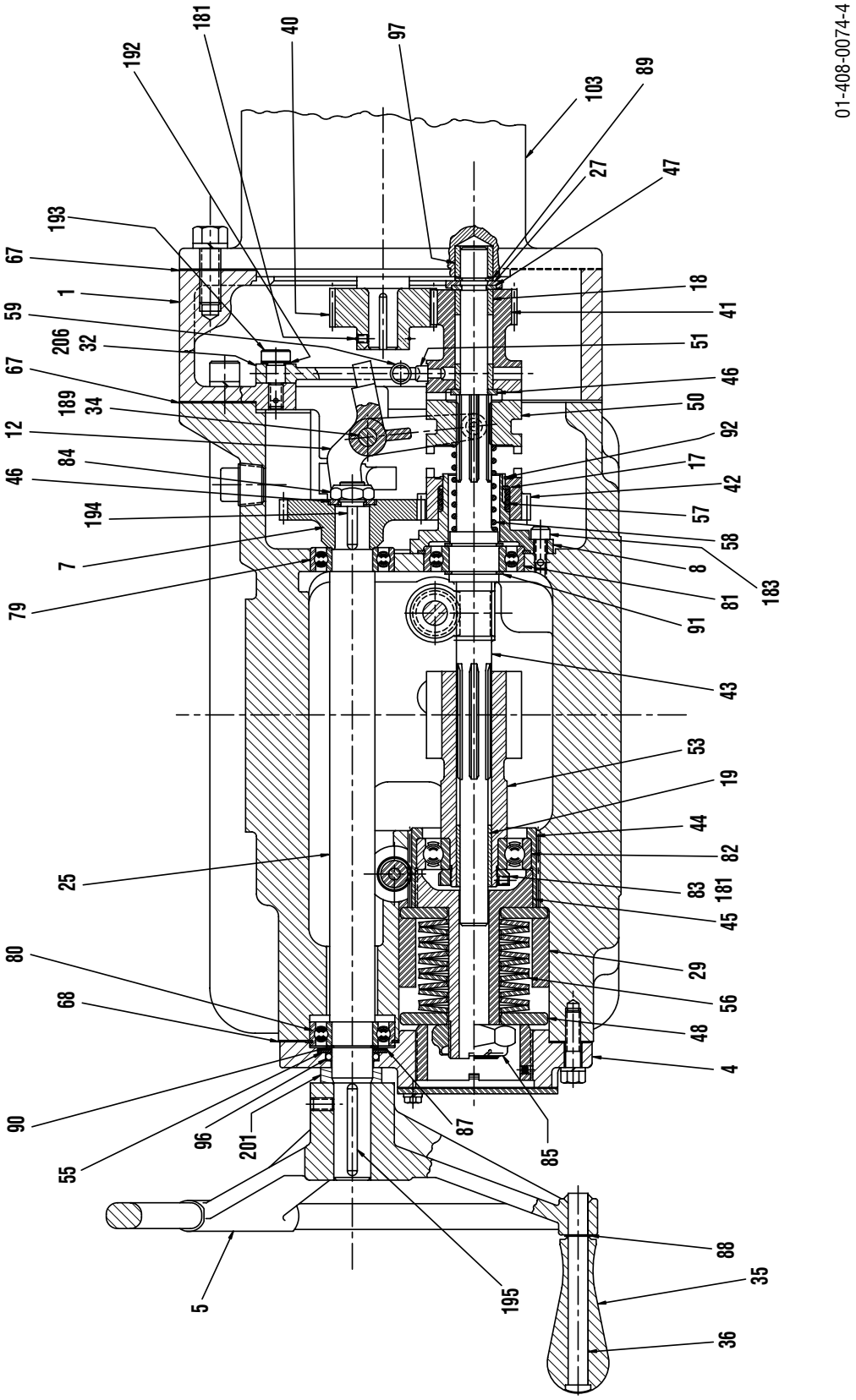

Figure 7.11 – SMB-0 through SMB-4 and 4T Parts Diagram – Drive Sleeve Side View

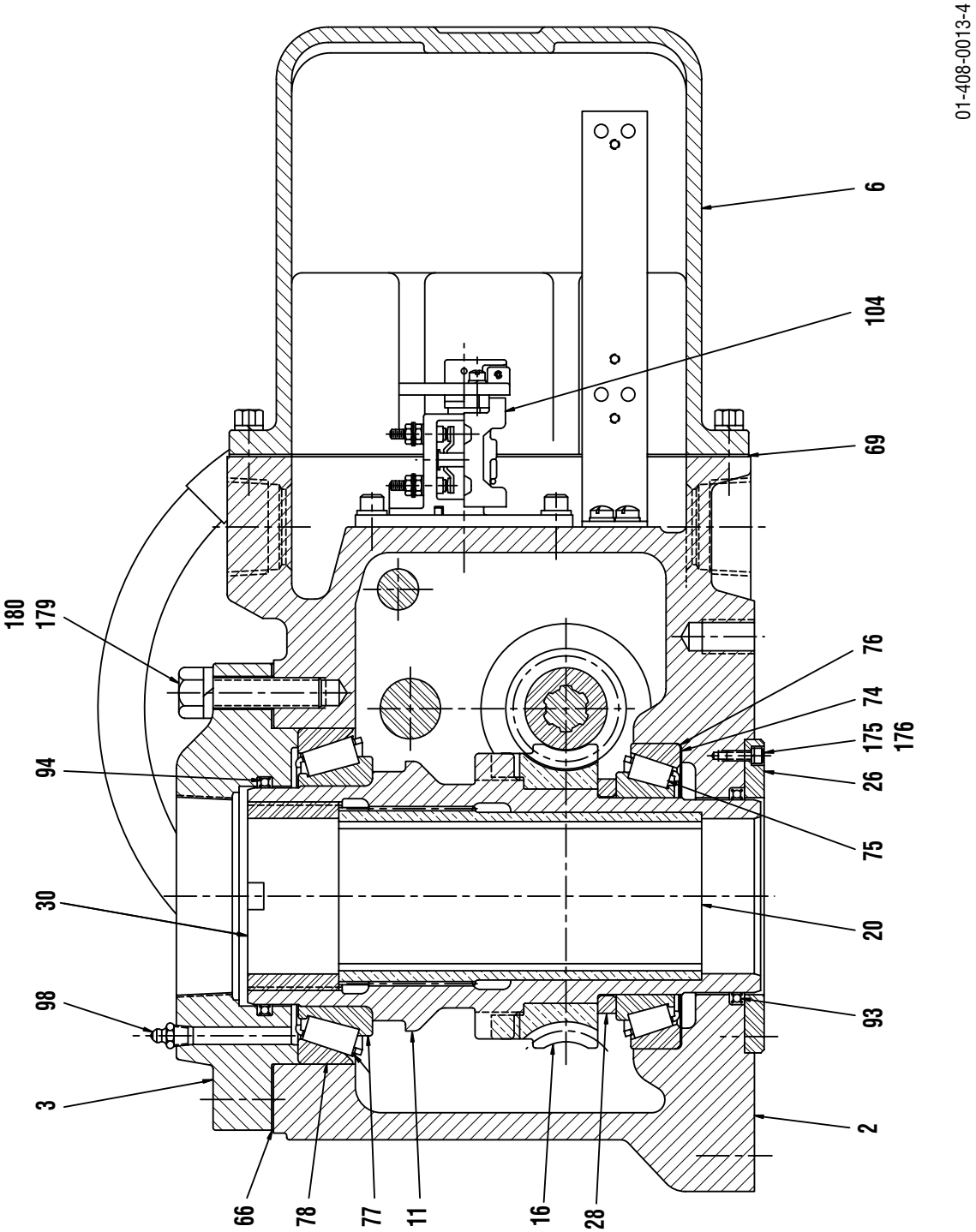

Figure 7.12 – SMB-0 through SMB-4 and 4T Exploded View

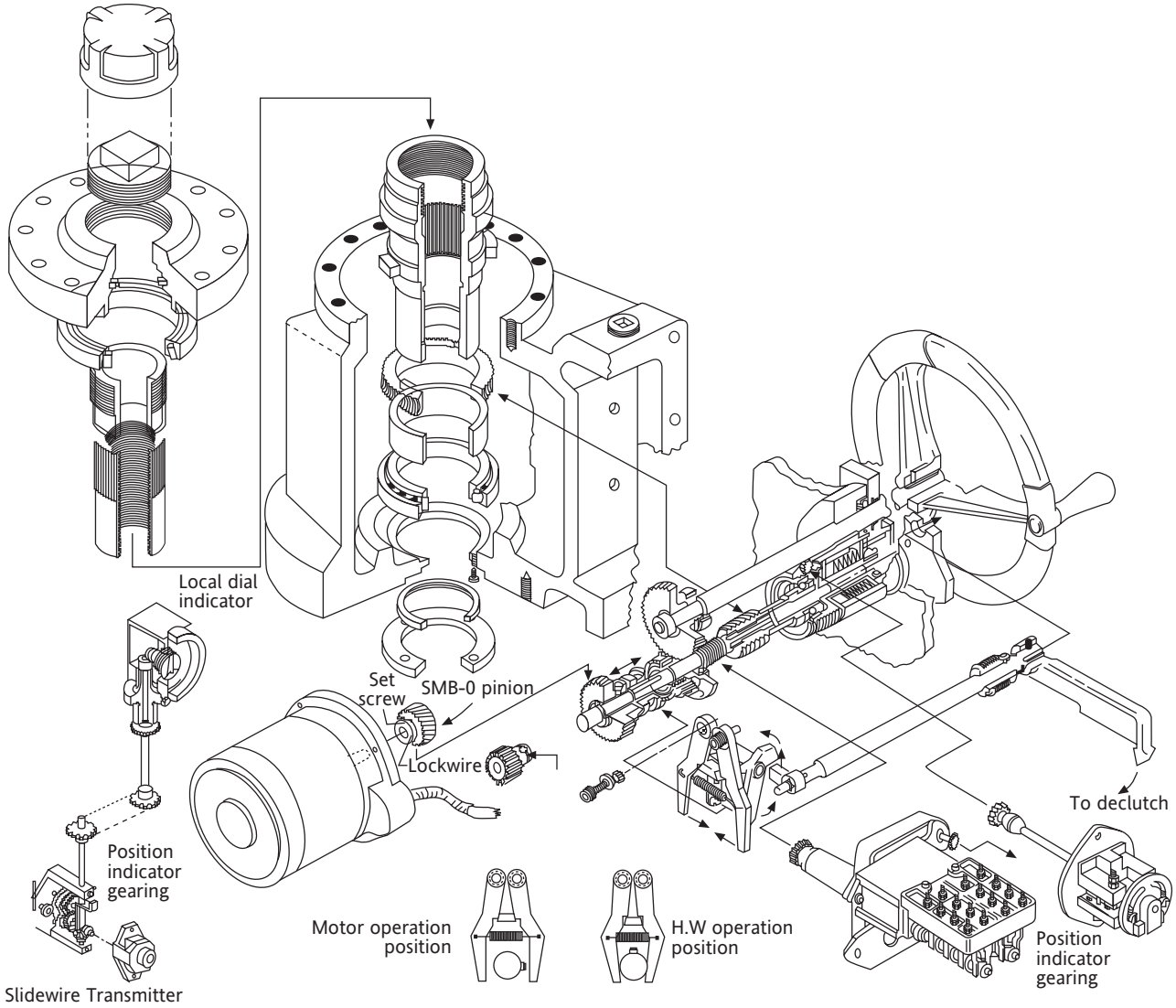

08-408-0001-4

Table 7.3 – SMB-0 through SMB-4 and 4T Parts List

Piece	Quantity	Description
1	1	Clutch Housing
2	1	Housing
3	1	Housing Cover
4	1	Spring Cartridge Cap
5	1	Handwheel
6	1	Limit Switch Compartment Cover
7	1	Handwheel Gear
8	1	Worm Shaft Bearing Cap
9	1	Declutch Link
10	1	Declutch Lever
11	1	Drive Sleeve
12	1	Declutch Fork
16	1	Worm Gear
17	1	Spring Ring
18	1	Motor Clutch Gear Bushing
19	1	Worm Bushing
20	1	Stem Nut
24	1	Declutch Shaft
25	1	Handwheel Shaft
26	1	Seal Retainer Plate
27	1	Split Ring Retainer
28	1	Worm Gear Spacer
29	1	Torque Limit Sleeve
30	1	Locking Nut
31	1	Motor Conduit Nipple
32	1	Clutch Tripper #1 & #2
34	1	Fork Pivot Pin
35	1	Handle
36	1	Handle Rod
37	1	Drum
38	1	Upper Hinge
39	1	Lower Hinge
40	1	Motor Pinion
41	1	Worm Shaft Clutch Gear
42	1	Handwheel Clutch Pinion
43	1	Worm Shaft
44	1	Bearing Cartridge Cap
45	1	Bearing Cartridge Stem
46	1	Clutch Gear Spacer
47	1	Split Ring
48	1	Thrust Washer
49	1	Clutch Roller
50	1	Worm Shaft Clutch
51	1	Cam Tripper Pin
52	1	Clutch Roller Pin
53	1	Worm
54	1	Torsion Spring
55	1	O-Ring Spacer
56	1	Belleville Spring
57	1	Handwheel Pinion Spring
58	1	Fork Return Spring
59	1	Tripper Spring

Table 7.3 – SMB-0 through SMB-4 and 4T Parts List (continued)

Piece	Quantity	Description
60	1	Nameplate
66	1	Housing Cover Gasket
67	1	Clutch Housing and Motor Gasket
68	1	Spring Cartridge Cap Gasket
69	1	Limit Switch Compartment Cover Gasket
70	1	Locknut
71	1	Spring Cartridge Cap Plate
72	1	Spring Cartridge Cap Plate Gasket
73	1	Retaining Ring
74	1	Bearing Shims
75	1	Lower Roller Bearing Cone
76	1	Lower Roller Bearing Cup
77	1	Upper Roller Bearing Cone
78	1	Upper Roller Bearing Cup
79	1	Ball Bearing
80	1	Bearing
81	1	Ball Bearing
82	1	Ball Bearing
83	1	Bearing Locknut
84	1	Elastic Stop Nut
85	1	Elastic Stop Nut
86	1	Retaining Ring
87	1	Retaining Ring (SMB-1, -2, -3 only)
88	1	Retaining Ring
89	1	Retaining Ring
90	1	Retaining Ring
91	1	Retaining Ring
92	1	Retaining Ring
93	1	Quad Ring
94	1	Quad Ring
95	1	O-Ring
96	1	O-Ring (SMB-1, -2 only)
97	1	Bushing
98	1	Grease Fitting
103	1	Motor
104	1	Torque Switch
105	1	Geared Limit Switch
140	1	Terminal Strip
141	1	Terminal Strip Mounting Bracket
175	1	Socket Head Cap Screw
176	1	Lockwasher
179	1	Hex Head Cap Screw
180	1	Lockwasher
181	1	Socket Head Set Screw
183	1	Roll Pin
184	1	Roll Pin
185	1	Key
188	1	Declutch Shaft Journal
189	1	Socket Head Set Screw
190	1	Socket head Cap Screw
191	1	Lockwasher

Table 7.3 – SMB-0 through SMB-4 and 4T Parts List (continued)

Piece	Quantity	Description
192	1	Thrust Bearing
193	1	Socket Head Shoulder Screw
194	1	Key (SMB-4 only)
195	1	Key
196	1	Hex Head Cap Screw
197	1	Lockwasher
201	1	Handwheel Shaft Spacer
203	1	Socket Head Set Screw
206	1	Clutch Tripper Insert

7.4 SMB-5 (thrust and torque) and SMB-5T (torque only)

⚠ WARNING: See Section 4.1 and 4.2 on Safety Precautions and Safety Practices before proceeding with disassembly.

7.4.1 SMB-5 and SMB-5T Disassembly

Piece numbers refer to **Figures 7.13**, **7.14**, and **7.15**.

1. Remove **Drive Sleeve Locknut** (piece #130).

CAUTION: The SMB-5 drive sleeve locknut has left-hand threads and must be rotated clockwise to remove.

2. Rotate the **Handwheel** (piece #10) to close valve, causing the **Stem Nut** (piece #127) to rise up the threaded valve stem until the stem nut splines are free of the **Drive Sleeve** (piece #126).
3. Rotate the **Stem Nut** (piece #127) by hand for the remaining length of the valve stem and remove.
4. Remove the **Limit Switch Compartment Cover** (piece #12) and disconnect all external electrical leads to the actuator.

NOTE: Ensure all motor and control leads are labeled for reassembly.

5. Remove the actuator from the valve if required to facilitate disassembly.
6. Disconnect motor leads and leads between the **Torque Switch** (piece #116) and **Geared Limit Switch** (piece #117).
7. Remove **Torque Switch** (piece #116) and **Geared Limit Switch** (piece #117).
8. Remove **Handwheel Washer** (piece #60) and remove the **Handwheel** (piece #10) and the **Handwheel Clutch** (piece #13) from the **Handwheel Shaft and Pinion** (piece #40).

SMB-5 Thrust Unit Only

1. Remove **Thrust Adapter Housing** (piece #125) assembly from the **Housing** (piece #1).

NOTE: If disassembly of the thrust adapter assembly is not required, continue to Step 2.

---

   a. Remove the **Seal Retainer Plate** (piece #129) and the **Oil Seal** (piece #132).
   b. Loosen the set screw and remove the **Thrust Bearing Cartridge** (piece #128) from the **Thrust Adapter Housing** (piece #125).
   c. Remove the **Upper Bearing Roller Assembly** (piece #131).
   d. Lift the **Thrust Drive Sleeve** (piece #126) out of the **Thrust Adapter Housing** (piece #125).
   e. Remove the **Lower Bearing Roller Assembly** (piece #131).
2. Using lifting eye bolts, remove **Housing Cover** (piece #3).
3. Remove the **Torque Drive Sleeve** (piece #11) and the **Worm Gear** (piece #17) in this order.
4. Remove **Motor** (piece #115) and **Motor Adapter** (piece #5).

NOTE: Record the thickness of gaskets for reassembly.

---

5. Remove the **Intermediate Pinion and Shaft** (piece #15) and **Motor Drive Intermediate Gear** (piece #41) as an integral assembly.

NOTE: Record the location and the thickness of gearing shims in the housing.

---

6. Remove the **Output Worm Shaft Gear** (piece #42) and the **Bearing Spacer** (piece #64).
7. Punchmark **Worm Shaft End Cap** (piece #7) before removing the cap.
8. Remove the **Worm Shaft End Cap** (piece #7).

NOTE: Record the gasket thickness for **Declutch Housing Cover** (piece #4) for reassembly.

---

9. Remove declutch assembly as follows:
   a. Clean grease from assembly as much as possible.
   b. Scribe an alignment mark on all parts and shaft for use during reassembly.
   c. Remove the **Declutch Lever Stop** (piece #28), **Tripper Spring** (piece #67), **Clutch Tripper #1 and #2** (piece #33 and #34), and **Roll Pin** (piece #110).
   d. Loosen set screws on **Declutch Lever** (piece #9) and **Collar** (piece #103).
   e. Remove the **Declutch Lever** (piece #9), **Declutch Cap** (piece #59), and slide the **Declutch Shaft** (piece #30) out through the bottom of the **Declutch Housing** (piece #2), while removing the **Declutch Fork** (piece #14) and other **Declutch Shaft Mounted Components** (piece #66, #70, #69, and #103) from the **Declutch Shaft** (piece #30).
10. Remove the **Handwheel Shaft and Pinion** (piece #40), noting how many and which spacers go on either side of the **Declutch Fork** (piece #14).
11. Remove the **Solid Drive Shaft** (piece #43) and the **Flexible Jaw Clutch** assembly (pieces #50, #73, #74, #75, #76, #97, and #98) as an integral assembly, **Gear Clutch Spacer** (piece #47), **Sliding Clutch Gear** (piece #51), and **Clutch Compression Spring** (piece #68).
12. Remove **Splined Insert** (piece #54) using jack screws, **Spirolox Ring** (piece #107), and **Handwheel Gear** (piece #6).
13. Remove **Gear Mounting Bracket** (piece #8) using jackscrews, **Bearing** (piece #93), and **Bearing Adapter** (piece #65).
14. Pull **Hollow Drive Shaft** (piece #55) toward declutch end and remove **Spirolox Ring** (piece #106).

⚠ WARNING: Declutch Housing is under torque spring load.

15. Remove **Declutch Housing** (piece #2) by loosening the two cap screws evenly and in turn to allow gradual release of the torque spring preload.
16. Push **Hollow Drive Shaft** (piece #55) toward the **Motor** (piece #115) end, loosen set screw, and remove **Bearing Locknut** (piece #99).

NOTE: Hold hollow drive shaft using adjustable spanner on splines.

a. Remove **Bearing** (piece #95) by pushing **Hollow Drive Shaft** (piece #55) toward declutch end.
b. Remove **Geared Limit Threaded Collar** (piece #32) and key.
c. Remove **Hollow Drive Shaft** (piece #55) from declutch end of the **Housing** (piece #1).

17. Loosen set screw in **Cartridge Stem Locking Nut** (piece #48) and temporarily replace **Declutch Housing** (piece #2) with two screws to compress the torque spring.

⚠ WARNING: Declutch Housing is under spring load.

18. Remove **Cartridge Stem Locking Nut** (piece #48).
19. Remove **Declutch Housing** (piece #2) by loosening the two cap screws evenly and in turn to allow gradual release of the torque spring preload.
20. Pull **Bearing Cartridge Stem** (piece #45) out partially and remove the **Thrust Washers** (piece #46), **Torque Limit Sleeve** (piece #62), and **Belleville Springs** (piece #58).
21. Remove bearing cartridge/worm assembly from the **Housing** (piece #1).
    a. Loosen two set screws on **Bearing Cartridge Cap** (piece #44) and unscrew **Bearing Cartridge Stem** (piece #45).
22. Slide **Bearing Cartridge Cap** (piece #44) off toward **Worm** (piece #56) threads.
23. Loosen set screw and remove **Bearing Locknut** (piece #100).
24. Press off two **Bearing Cone and Cups** (pieces #90 and #91).

NOTE: Cups and cones are sets. They must remain together, in sets.

7.4.2 SMB-5 and SMB-5T Reassembly

Piece numbers refer to **Figures 7.13, 7.14**, and **7.15**.

NOTE: Clean the housing and all parts before reassembly. During reassembly ensure that same thickness gaskets and shims are installed as were removed during disassembly.

SMB-5T (Torque Actuator)

1. Press two **Bearing Cone and Cups** (piece #90 and 91) onto **Worm** (piece #56), ensuring that bearing races are matched. Ensure the **Bearing Spacer** (piece #92) is installed.
2. Install **Bearing Locknut** (piece #100) and tighten set screw.
3. Apply heat to the **Bearing Cartridge Cap** (piece #44) and install onto the **Bearing Cone and Cup** (piece #90, #91) from the **Worm** (piece #56) end. Ensure that the **Bearing Cartridge Cap** seats on the **Bearing** .
4. Thread the **Bearing Cartridge Stem** (piece #45) tightly into the **Bearing Cartridge Cap** and tighten two set screws.
5. Install **Bearing Cartridge/Worm Assembly** in **Housing** (piece #1).
6. Replace the **Belleville Spring Assembly** components in the following order: **Thrust Washer** (piece #46), the six **Belleville Springs** (piece #58) (stacked as shown), **Torque Limit Sleeve** (piece #62), and the second **Thrust Washer** (piece #46).

NOTE: Ensure that the non-beveled flat side of thrust washer is against the springs. Springs stack this way: ( )( )( ).

7. Thread **Cartridge Stem Locking Nut** (piece #48) onto the **Bearing Cartridge Stem** (piece #45) by hand.
8. Install **Hollow Drive Shaft** (piece #55).
   a. Install **Geared Limit Threaded Collar** (piece #32) and key on motor end of **Hollow Drive Shaft** with threaded end toward **Worm** (piece #56).
   b. Slide **Bearing** (piece #95) onto **Hollow Drive Shaft** (piece #55).
   c. Thread **Bearing Locknut** (piece #99) onto the **Hollow Drive Shaft** . Align the set screw hole with the drilled “spot” on the shaft. Install and tighten set screw. (Hold drive shaft using adjustable spanner on splines.)
9. Push **Hollow Drive Shaft** (piece #55) to declutch end and install **Bearing Spacer** (piece #64).
10. Install the **Output Worm Shaft Gear** (piece #42) and **Intermediate Pinion and Shaft** (piece #15).
11. Install motor gearing shims in **Motor Adapter** (piece #5) bearing bores and install the **Motor Adapter Gasket** (piece #84) and **Motor Adapter** (piece #5). Tap the **Motor Adapter** to ensure that the bearings seat.
12. Check **Intermediate Pinion and Shaft** (piece #15) for proper shims. Shaft should rotate freely with no axial movement. Use original shims or provide new shims that are the same thickness as measured at disassembly.
13. Install **Motor** (piece #115).
14. Install **Spirolox Ring** (piece # 106) on the **Hollow Drive Shaft** (piece #55).
15. Install **Declutch Housing** (piece #2) using two screws only to compress the **Belleville Springs** (piece #58). **DO NOT** install gasket.
16. Using two screws, thread **Cartridge Stem Locking Nut** (piece #48) on the **Bearing Cartridge Stem** (piece #45) until the **Locking Nut** is snug against the **Thrust Washer** (piece #46).
17. Remove the **Declutch Housing** (piece #2) and make sure the set screw hole is aligned with the spot mark on the **Bearing Cartridge Stem** threads. Tighten **Cartridge Stem Locking Nut** set screw.
18. Reinstall **Declutch Housing** with **Gasket** (piece #80).
19. Install **Gear Mounting Bracket Assembly** (pieces #8, #65, and #93).
20. Install **Handwheel Gear** (piece #6) and **Spirolox Ring** (piece #107).
21. Install **Splined Insert** (piece #54), **Spring Washer** (piece #61), and **Clutch Compression Spring** (piece #68).
22. Install **Sliding Clutch Gear** (piece #51) onto **Hollow Drive Shaft** (piece #55) splines.
23. Install **Solid Drive Shaft** (piece #43), ensuring that the **Clutch Gear Spacer** (piece #47) is in place. Align splines on the **Solid Drive Shaft** and **Output Worm Shaft Gear** and push the **Drive Shaft** into the **Housing** (piece #1) from the declutch end.
24. Mount **Handwheel Shaft Bearings** (pieces #94 and #97) on the **Handwheel Shaft and Pinion** (piece #40) and install assembly into the **Housing**.
25. Install the **Declutch Shaft** (piece #30) and **Torsion Spring** (piece #57) into the **Declutch Cap** (piece #59).

26. Install **Declutch Shaft Assembly** through the bottom of the **Declutch Housing** (piece #2).
    a. The **Declutch Shaft Assembly** consists of **Declutch Shaft** (piece #30), **Torsion Spring** (piece #57), **Declutch Cap** (piece #59), **Drum** (piece #27), **Declutch Arm** (piece #66), **Declutch Shaft Washers** (piece #70, 3 pieces), **Declutch Fork** (piece #14), **Declutch Shaft Spacer** (piece #69), **Collar** (piece #103), and **Gasket** (piece #81).
27. Align scribe marks.

NOTE: Declutch shaft must be installed with keyseat facing right side of declutch housing when viewed from the declutch end of the actuator.

28. Fasten **Declutch Cap** (piece #59). Observe punch marks.
29. Insert **Roll Pin** (piece #110) through the **Declutch Arm** (piece #66) and **Declutch Shaft** (piece #30).
30. Ensuring that the declutch shaft bottoms against the declutch cap, push the **Collar** (piece #103) against the top of the housing and tighten the collar set screw.

NOTE: Ensure that the **Oil Seal** (piece #105) is properly installed.

31. Install the **Declutch Lever** (piece #9) and tighten the set screw.
32. Rotate the **Declutch Lever** clockwise, hold in position, and install the **Declutch Lever Stop** (piece #28).
33. Install **Clutch Trippers** (piece #33 and #34) and the **Tripper Spring** (piece #67).
34. Install the **Declutch Housing Cover** (piece #4) and **Gasket** (piece #82).

NOTE: Ensure that **Handwheel Oil Seal** (piece #108) is in place.

35. Install **Worm Shaft End Cap** (piece #7) and **Gasket** (piece #83).

CAUTION: Ensure that the same number of gaskets are installed as were removed during disassembly. Thickness of gaskets must be sufficient to prevent the end cap from bearing on the drive shaft.

36. Install the **Worm Gear** (piece #17).
37. Install **Torque Drive Sleeve** (piece #11) and **Drive Sleeve Thrust Bearing** (pieces #139, #140).
38. Apply fresh, clean lubricant in the actuator **Housing** to 1 1/2" from top.
39. Install the **Housing Cover Gasket** (piece #79) and the **Housing Cover** (piece #3).

SMB-5 (Thrust Unit Only)

NOTE: If the thrust **Adapter Housing** (piece #125) assembly was not disassembled, continue to Step 6.

NOTE: Thrust bearing races should be pressed on the **Thrust Drive Sleeve** (piece #126), in the **Thrust Adapter Housing** (piece #125), and the **Thrust Bearing Cartridge** (piece #128) prior to beginning reassembly procedure.

1. Install the **Lower Thrust Bearing** (piece #131) in the **Thrust Adapter Housing** (piece #125).
2. Install the short end of the **Thrust Drive Sleeve** (piece #126) into the **Thrust Adapter Housing** (piece #125).
3. Install the **Upper Thrust Bearing** (piece #131) on the **Thrust Drive Sleeve** (piece #126).
4. Install the **Thrust Bearing Cartridge** (piece #128), thread in tight or until drag is felt on **Thrust Drive Sleeve**, and tighten set screw.
5. Install **Oil Seal** (piece #132) and **Seal Retainer Plate** (piece #129).
6. Lift the actuator or turn upside down and install **Thrust Adapter Housing** (piece #125).

NOTE: Ensure that the **Thrust Drive Sleeve O-Ring** (piece #134) is in place.

7. Install **Stem Nut** (piece #127).
8. Install **Drive Sleeve Locknut** (piece #130) and crimp or stake the top threads in two places.

CAUTION: The SMB-5 drive sleeve locknut has left-hand threads and must be rotated counterclockwise to install.

SMB-5 and 5T

1. Install **Torque Switch** (piece #116) and **Geared Limit Switch** (piece #117).
2. Connect motor leads and the leads to the **Torque Switch** and **Geared Limit Switch**.
3. Install **Handwheel Clutch** (piece #13), **Handwheel** (piece #10), and **Handwheel Washer** (piece #60) on the **Handwheel Shaft and Pinion** (piece #40).
4. Install valve operator on valve.

CAUTION: The geared limit switch must be reset before energizing electrical power to the valve operator and attempting motor operation.

---

5. Connect all external electrical leads to the actuator.
6. Follow geared limit switch setting procedure to reset the **Geared Limit Switch** (piece #117).
7. Install the **Limit Switch Compartment Cover** (piece #12).
8. Re-energize all electrical power to the actuator.

Figure 7.13 – SMB-5 and 5T Parts Diagram

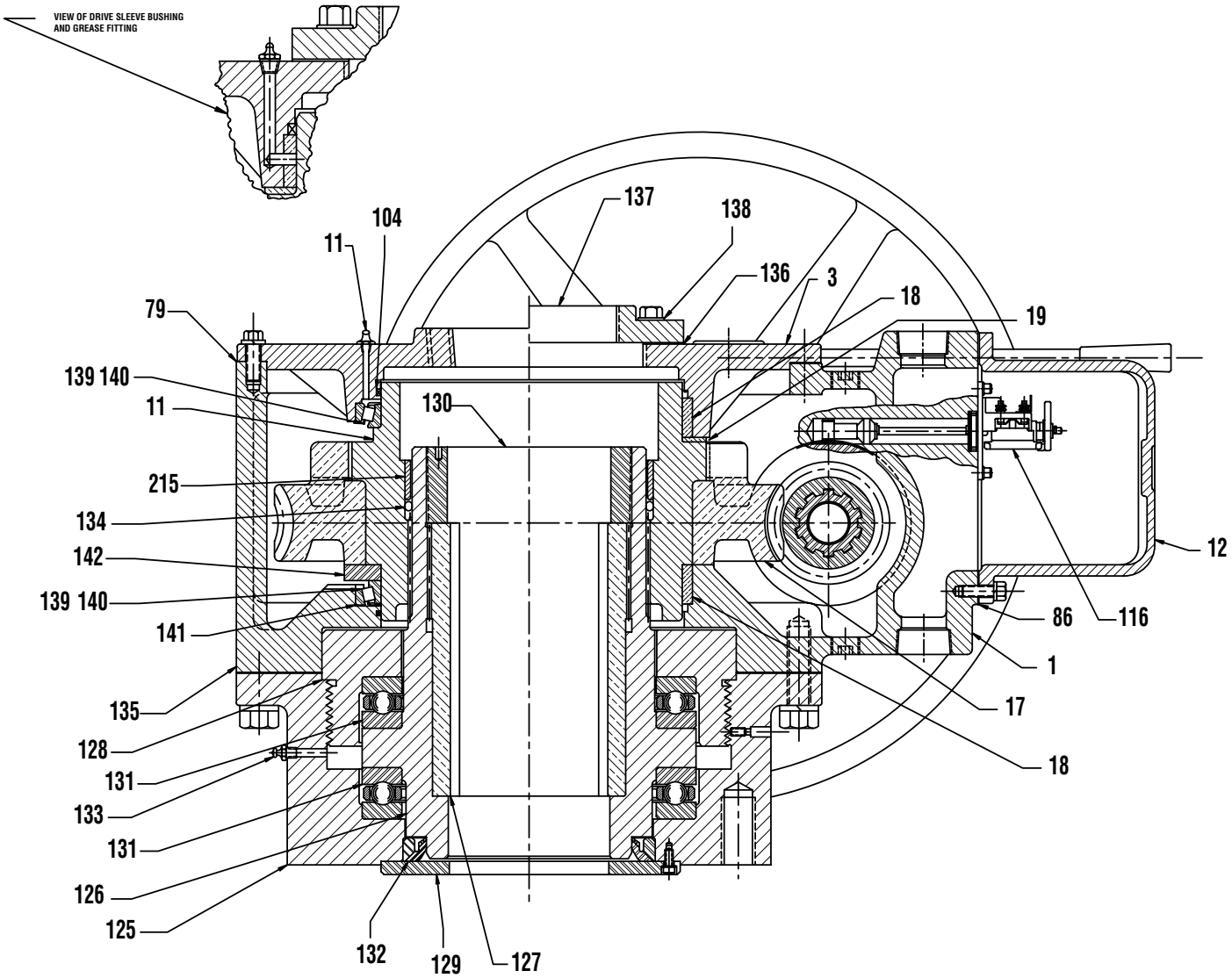

NOTE: Serial numbers through 277159 use Part #18.
Serial numbers 277160 and higher use Part #139 and #140.

01-413-0060-4

Figure 7.14 – SMB-5 and 5T - Top View

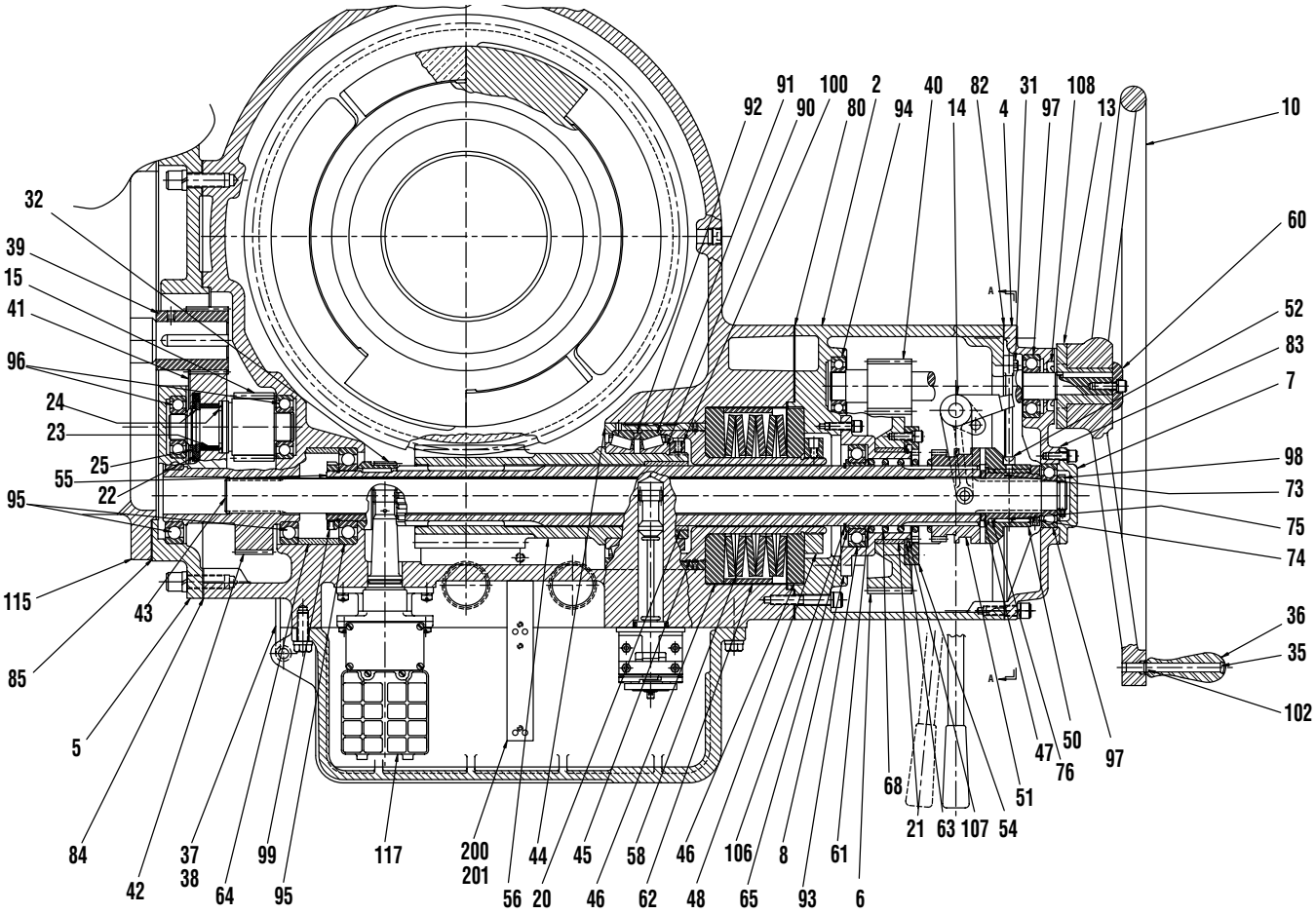

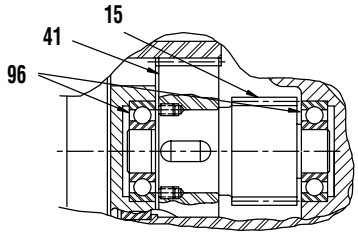

ALT. HARD CLUTCH ASSEMBLY

01-413-0036-4

Figure 7.15 – SMB-5 and 5T Declutch Housing Detail

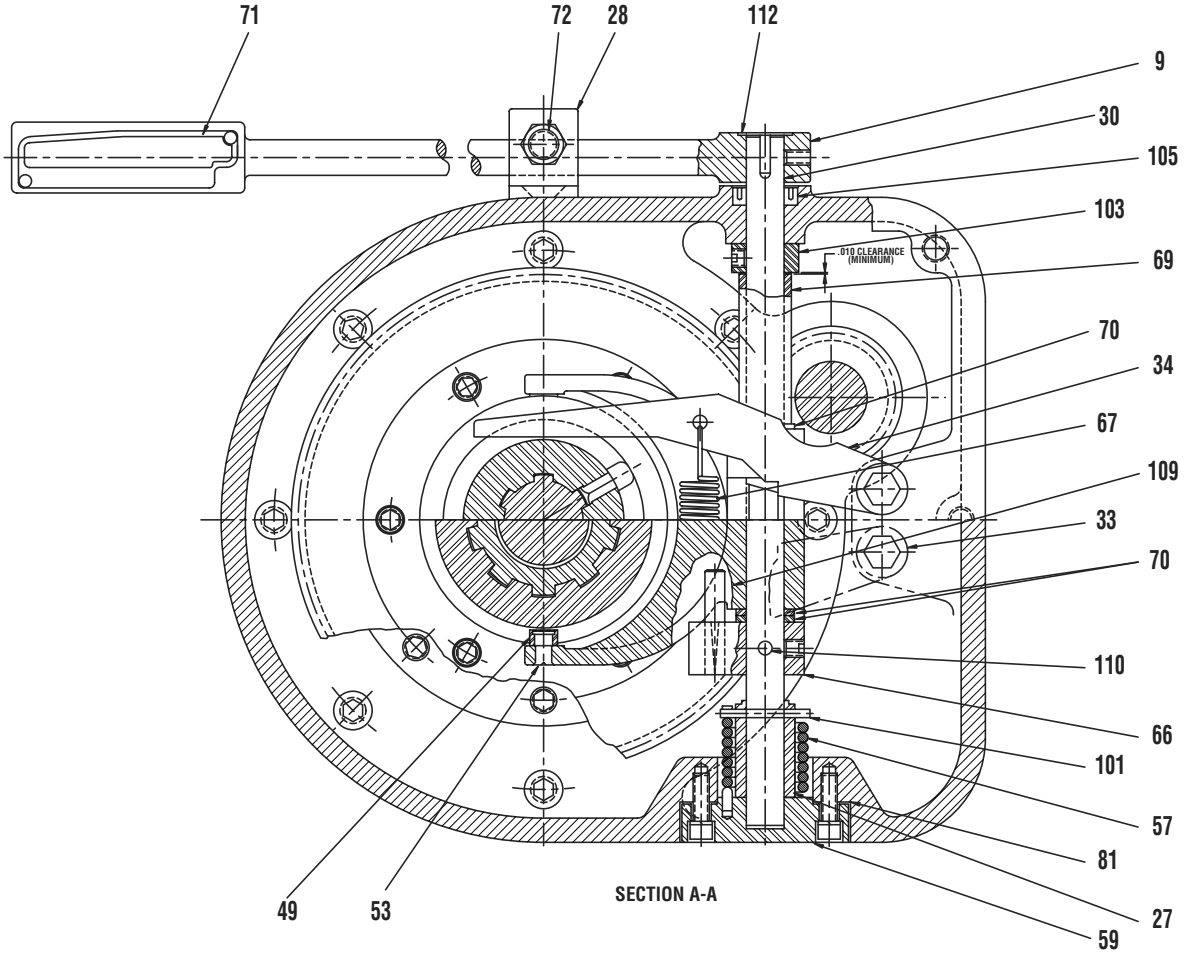

01-413-0037-4

Figure 7.16 – SMB-5 and 5T Exploded View

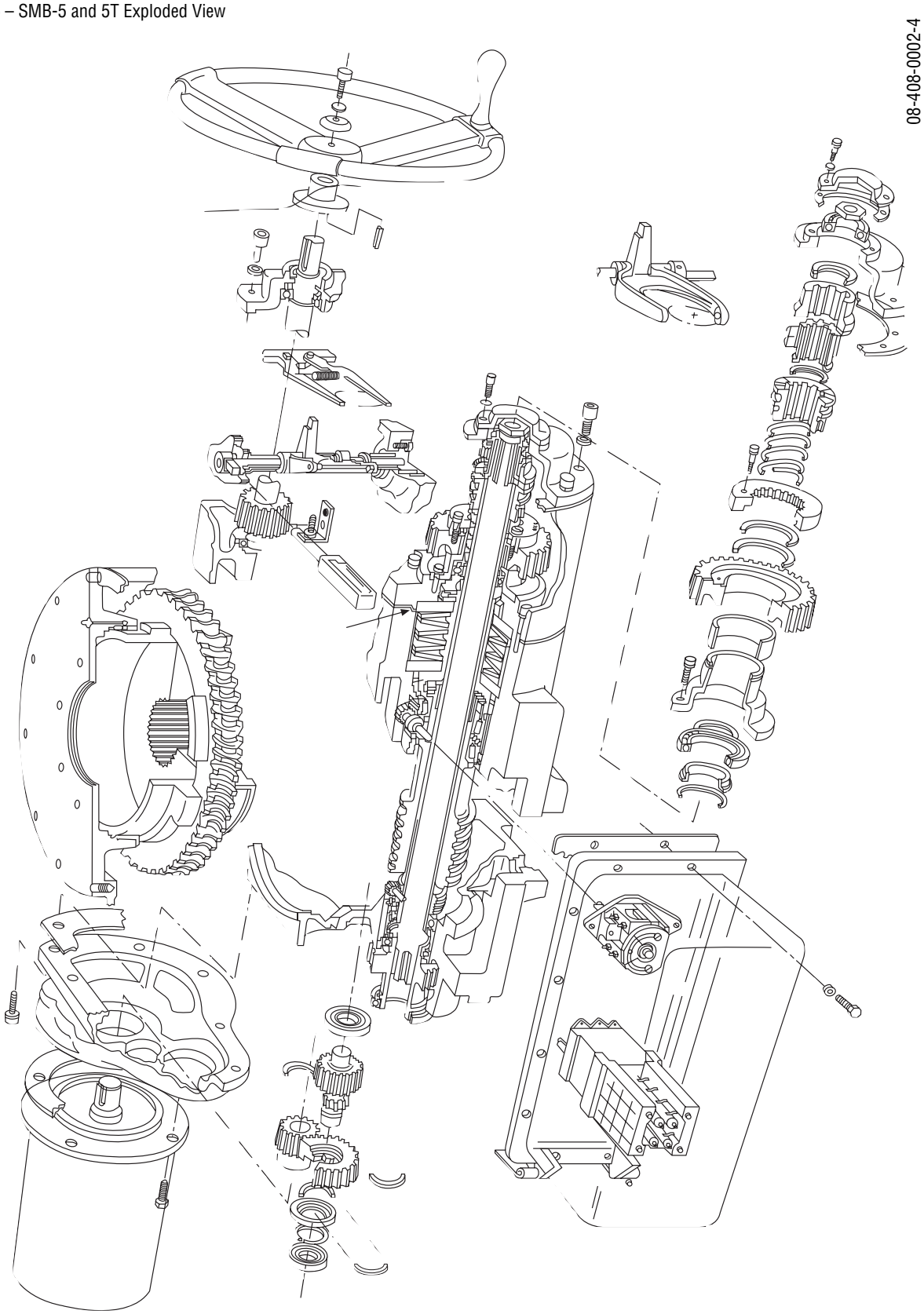

Table 7.4 – SMB-5 and 5T Parts List

Piece	Quantity	Description
1	1	Housing
2	1	Declutch Housing
3	1	Housing Cover
4	1	Declutch Housing Cover
5	1	Motor Adapter
6	1	Handwheel Gear
7	1	Worm Shaft End Cap
8	1	Gear Mounting Bracket
9	1	Declutch Lever
10	1	Handwheel
11	1	Torque Drive Sleeve
12	1	Limit Switch Compartment Cover
13	1	Handwheel Clutch
14	1	Declutch Fork
15	1	Intermediate Pinion and Shaft
17	1	Worm Gear
18	1	Drive Sleeve Bushing
19	1	Drive Sleeve Thrust Bearing
20	1	Worm Bushing
21	1	Handwheel Gear Bushing
22	1	Retaining Ring
23	1	Gear Insert
24	1	Split Ring
25	1	Spirolox Ring
27	1	Declutch Shaft Drum
28	1	Declutch Lever Stop
30	1	Declutch Shaft
31	1	Tripper Bolt
32	1	Geared Limit Threaded Collar
33	1	Clutch Tripper #1
34	1	Clutch Tripper #2
35	1	Handle Rod
36	1	Handle
37	1	Upper Hinge
38	1	Lower Hinge
39	1	Motor Pinion
40	1	Handwheel Shaft and Pinion
41	1	Motor Drive Intermediate Gear
42	1	Output Worm Shaft Gear
43	1	Solid Drive Shaft
44	1	Bearing Cartridge Cap
45	1	Bearing Cartridge Stem
46	1	Thrust Washer
47	1	Clutch Gear Spacer
48	1	Cartridge Stem Locking Nut
49	1	Fork Roller
50	1	Flexible Jaw Clutch Housing
51	1	Sliding Clutch Gear
52	1	Motor Clutch Gear Cam Pin
53	1	Fork Roller Pin
54	1	Splined Insert
55	1	Hollow Drive Shaft

Table 7.4 – SMB-5 and 5T Parts List (continued)

Piece	Quantity	Description
56	1	Worm
57	1	Torsion Spring
58	1	Belleville Spring
59	1	Declutch Cap
60	1	Handwheel Washer
61	1	Spring Washer
62	1	Torque Limit Sleeve
63	1	Handwheel Gear Spacer
64	1	Bearing Spacer
65	1	Bearing Adapter
66	1	Declutch Arm
67	1	Tripper Spring
68	1	Clutch Compression Spring
69	1	Declutch Shaft Spacer
70	1	Declutch Shaft Washer
71	1	Declutch Lever Name Plate
72	1	Stop Stud
73	1	Flexible Jaw Clutch Sleeve
74	1	Flexible Jaw Clutch Collar
75	1	Nylon Insert
76	1	Clutch Sleeve Insert
79	1	Housing Cover Gasket
80	1	Declutch Housing Gasket
81	1	Declutch Cap Gasket
82	1	Declutch Cover Gasket
83	1	Worm Shaft End Cap Gasket
84	1	Motor Adapter Gasket
85	1	Motor Gasket
86	1	Limit Switch Cover Gasket
90	1	Bearing Cone
91	1	Bearing Cup
92	1	Bearing Spacer
93	1	Bearing
94	1	Handwheel Shaft Bearing
95	1	Bearing
96	1	Bearing
97	1	Bearing
98	1	Bearing Locknut
99	1	Bearing Locknut
100	1	Bearing Locknut w/Cup Point
101	1	Roll Pin 3/16” x 1 5/8”
102	1	Retaining Ring
103	1	Collar (3/4” Bore)
104	1	Quad Ring
105	1	Oil Seal
106	1	Spirolox Ring
107	1	Spirolox Ring
108	1	Oil Seal
109	1	Groove Pin
110	1	Roll Pin
111	1	Grease Fitting
112	1	Welsh Plug
115	1	Motor

Table 7.4 – SMB-5 and 5T Parts List (continued)

Piece	Quantity	Description
116	1	Torque Switch
117	1	Geared Limit Switch
125	1	Thrust Adapter Housing
126	1	Thrust Drive Sleeve
127	1	Stem Nut
128	1	Thrust Bearing Cartridge
129	1	Seal Retainer Plate
130	1	Drive Sleeve Locknut
131	2	Bearing Roller Assembly
132	1	Oil Seal
133	1	Grease Fitting
134	1	O-Ring
135	1	Gasket
136	1	Gasket
137	1	Threaded Flange
138	1	Sealing Washer
139	1	Bearing Cup
140	1	Bearing Cone
141	As required	Bearing Shim
142	1	Bearing Spacer
215	1	Seal Retainer Sleeve

8 SB Disassembly and Reassembly

⚠ WARNING: See Section 4.1 and 4.2 on Safety Precautions and Safety Practices before proceeding with disassembly.

⚠ WARNING: Extreme caution should be used in the disassembly and reassembly of the spring compensator assembly.

8.1 SB-00

The SB-00 actuator is a basic SMB-00 actuator with the housing cover, drive sleeve and locknut modified to provide spring compression to the stem nut. The disassembly/reassembly procedure for the SMB-00 is applicable (**Sections 7.2.1**, **SMB-00 Disassembly** and **Section 7.2.2**, **SMB-00 Reassembly**, with the following procedures replacing Step No. 13 and the stem nut removal procedure.

8.1.1 SB-00 Disassembly/Stem Nut Removal

Piece numbers refer to **Figure 8.1**.

1. Remove **Spring Housing Cover** (piece #121).
2. Remove **Locking Nut** (piece #125). Note that the **Set Screw** (piece #126) must be loosened before the **Locknut** can be removed.
3. Lift the **Spring Cartridge** (piece #123). Try to keep cartridge straight to aid in its removal. The **Belleville Springs** (piece #108), **Thrust Washer** (piece #124), and **Thrust Limiter Sleeve** (piece #119) (where applicable) will come out with the **Spring Cartridge**.

NOTE: Note the arrangement of the **Belleville Springs**.

4. If the actuator is mounted on the valve, place the actuator in manual operation. Rotate the **Handwheel** (piece #99) in the direction to effect a downward movement of the stem (usually the closed direction) until the compensator **Ball Bearing** (piece #81) stops rising.
5. Lift out the **Thrust Adapter Sleeve** (piece #120), and **Bearing** (piece #81).
6. If the actuator is not on a valve, the **Stem Nut** (piece #8) will lift out.
7. Remove **Bevel Gear Housing** (piece #96) as an assembly complete with side-mounted handwheel assembly.
8. To remove **Drive Sleeve Assembly**, proceed as in **Section 7.2.1**, **SMB-00 Disassembly**.

8.1.2 SB-00 Reassembly/Stem Nut Installation

Piece numbers refer to **Figure 8.1**.

1. If actuator is not on the valve, drop the **Stem Nut** (piece #8) in place and ensure that splines engage properly.
2. If actuator is on the valve, thread the **Stem Nut** onto the stem until the splines hit.
3. Replace the **Bevel Gear Housing** (piece #96) assembly as removed in Step 7 of **Section 8.1.1**, **SB-00 Disassembly/ Stem Nut Removal**.
4. Place the actuator in manual operation and rotate the **Handwheel** (piece #99) in the direction to effect an upward movement of the stem (usually the opening direction). Continue rotating until the stem begins to move upward.
5. Remove **Bevel Gear Housing** (piece #96).
6. Install **Thrust Adapter Sleeve** (piece #120) and **Bearing** (piece #81). Ensure **O-Ring** (piece #116) is properly installed.
7. Clean the bottom surface of the mounting flange for the **Bevel Gear Housing** (piece #96) and **Housing** (piece #1).
8. Place **Bevel Gear Housing** in position without any gasket between it and the **Housing** (piece #1).
9. Measure the gap between the **Bevel Gear Housing** and the **Housing**.
10. Install **Bevel Gear Housing Gasket** (piece #107) of the same thickness as the gap measured in Step 9.

NOTE: Allow for the compressibility of the gasket material. If the exact thickness gasket is not available, use the next larger thickness.

---

11. Install **Spring Cartridge** (piece #123), complete with **Thrust Washer** (piece #124), **Belleville Springs** (piece #108), **O-Ring** (piece #117), and **Quad-Ring** (piece #118).

NOTE: The springs should be stacked in the same fashion as was noted in Step 7 in **Section 8.1.1**, **SB-00 Disassembly/Stem Nut Removal**. The standard arrangement has the Belleville Washers stacked in pairs. See **NOTE** below.

---

12. Install **Locking Nut** (piece #125) and tighten until it is snug against the **Belleville Springs**. See **NOTE** below. Secure by tightening **Set Screw** (piece #126).

NOTE: The SB-00 has available an optional, very light, Belleville Spring set consisting of 11 washers arranged as shown in **Figure 8.1**. Ensure washers are reinstalled correctly. The light spring set also has a **Thrust Sleeve** (piece #119) that is installed at this point. When the light spring set is used, the locknut installed in the next step must be pulled up snug against the spring set and then tightened an additional 1 3/4 turns to preload the springs.

---

13. Install **Spring Housing Cover** (piece #121).

Figure 8.1 – SB-00 Parts Diagram

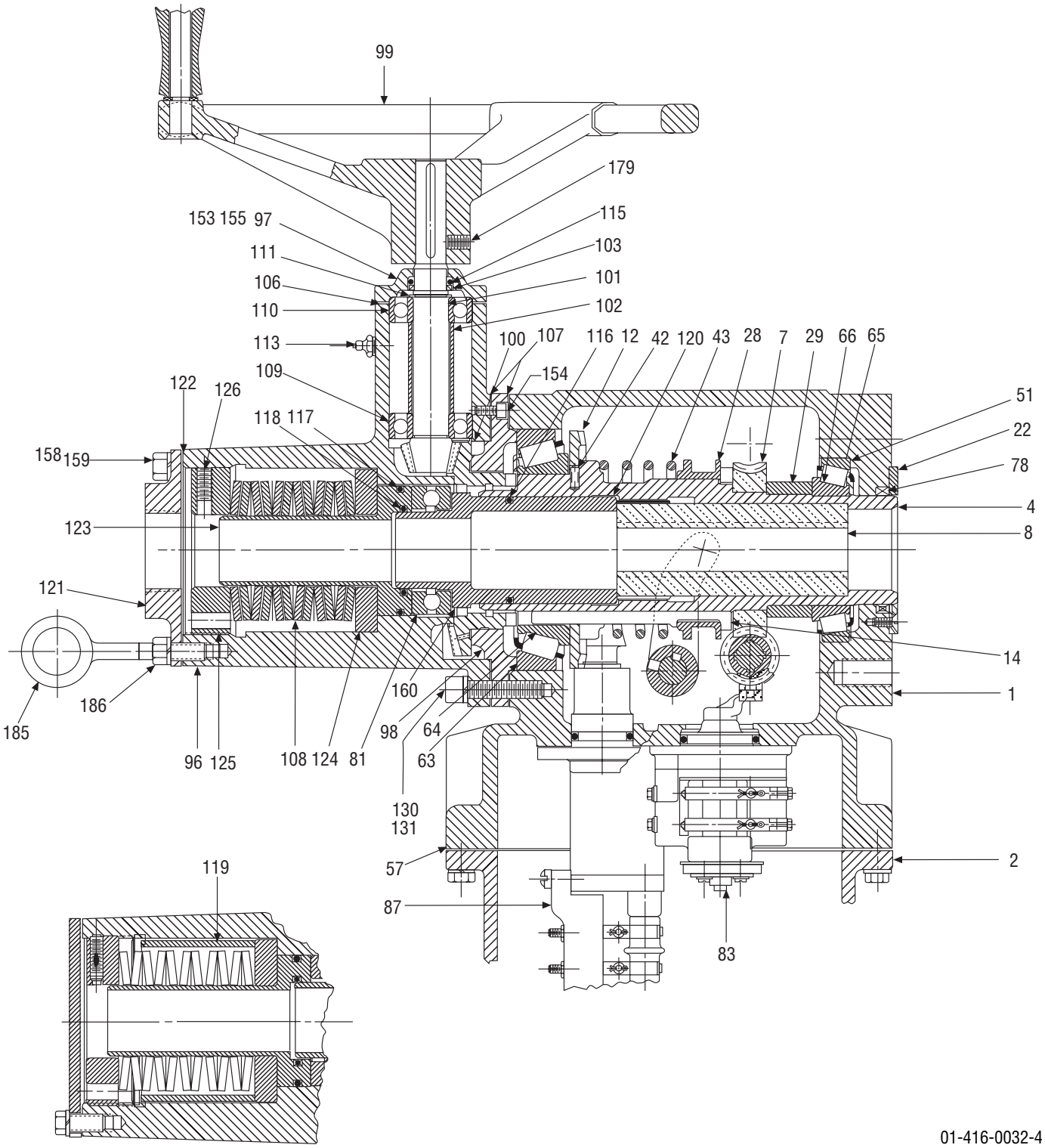

Table 8.1 – SB-00 Parts List

Piece	Quantity	Description
1	1	Housing
2	1	LS Compartment Cover
4	1	Drive Sleeve
7	1	Worm Gear
8	1	Stem Nut
12	1	GL Drive Hypoid Gear
14	1	Clutch Key
22	1	Seal Retainer Plate
28	1	Clutch Ring
29	1	Worm Gear Spacer
42	1	Dowel Pin
43	1	Clutch Compression Spring
51	1	Bearing Shim
57	1	GLS Compartment Cover Gasket
63	1	Bearing Cup
64	1	Bearing Cone
65	1	Bearing Cup
66	1	Bearing Cone
78	1	Quad Ring
81	1	Ball Bearing
83	1	Torque Switch
87	1	Geared Limit Switch
96	1	Bevel Gear Housing
97	1	Bevel Pinion Cap
98	1	Bevel Gear Cartridge
99	1	Handwheel
100	1	Bevel Gear
101	1	Handwheel Bevel Pinion
102	1	Bearing Spacer
103	1	O-Ring Spacer
106	1	Bevel Pinion Cap Gasket
107	1	Bevel Gear Housing Gasket
108	1	Belleville Spring
109	1	Ball Bearing
110	1	Ball Bearing
111	1	Retaining Ring
113	1	Grease Fitting
115	1	O-Ring
116	1	O-Ring
117	1	O-Ring
118	1	Quad-Ring
119	1	Thrust Limiter Sleeve
120	1	Thrust Adapter Sleeve
121	1	Spring Housing Cover
122	1	Housing Cover Gasket
123	1	Spring Cartridge
124	1	Thrust Washer
125	1	Locking Nut
126	1	Socket Head Set Screw
130	6	Socket Head Cap Screw
131	6	Lockwasher
153	4	Hex Head Cap Screw
154	2	Socket Head Cap Screw

Table 8.1 – SB-00 Parts List (continued)

Piece	Quantity	Description
155	4	Lockwasher
158	6	Lockwasher
159	4	Hex Head Cap Screw
160	1	Shim Set
179	1	Socket Head Set Screw
185	2	Lifting Eye Bolt
186	2	Hex Nuts

8.2 SB-0

⚠ WARNING: See Section 4.1 and 4.2 on Safety Precautions and Safety Practices before proceeding with disassembly.

⚠ WARNING: Extreme caution should be used in the disassembly and reassembly of the spring compensator assembly.

The SB-0 actuator is a basic SMB-0 actuator with the housing cover, drive sleeve, and locknut modified to provide spring compression to the stem nut. The disassembly/reassembly procedure for the SMB-0 is applicable (**Section 7.3.1**, **SMB-0, 1, 2, 3, 4, and 4T Disassembly** and **Section 7.3.2**, **SMB-0, 1, 2, 3, 4, and 4T Reassembly**), with the following procedures replacing Step 11 and stem nut removal procedure.

8.2.1 SB-0 Disassembly/Stem Nut Removal

Piece numbers refer to **Figure 8.2**.

1. Remove **Spring Housing** (piece #3).
2. Remove **Thrust Sleeve Bearing Cartridge** (piece #106). The **Belleville Spring** (piece #109) and **Belleville Spring Shim** (piece #108) will come off with the **Thrust Sleeve Bearing Cartridge** (piece #106).
3. Remove **Thrust Sleeve** (piece #107), being careful not to loosen or damage **O-Ring** (piece #94). The **Bearing Cup** (piece #116) will come out with the **Thrust Sleeve** (piece #107).
4. Remove the **Drive Sleeve** (piece #11) in accordance with Step 12 of **Section 7.3.1**, **SMB-0, 1, 2, 4, and 4T Disassembly**. If only the **Stem Nut** (piece #20) is to be removed, see Step 5.
5. If the actuator is not on the valve, the **Stem Nut** (piece #20) is accessible. If the actuator is on the valve, bolt a support bar across the top of the actuator housing to hold the **Thrust Bearing** (piece #77 and #78) in place.
   a. Place the actuator in hand operation.
   b. Rotate the **Handwheel** in the direction to effect a downward movement of the stem—usually the close direction. The **Stem Nut** will climb up the stem until it clears its splines.
   c. Rotate the **Stem Nut** off the stem.

8.2.2 SB-0 Reassembly/Stem Nut Installation

Piece numbers refer to **Figure 8.2**.

1. Replace the **Stem Nut** (piece #20).
   a. If the actuator is not on the valve, the stem nut will drop in the **Drive Sleeve** (piece #11) until it bottoms out on the shoulder in the bottom of the **Drive Sleeve**. Ensure splines are engaged.
   b. If the actuator is mounted on the valve, thread the **Stem Nut** (piece #20) down the stem until the spines hit. Put the actuator in manual operation. Rotate the **Handwheel** in the direction to move the stem upward—usually the open direction. The **Stem Nut** will lower as the **Handwheel** turns, until it bottoms out on the shoulder in the **Drive Sleeve** bottom and the stem starts to move up.

2. Replace the **Thrust Sleeve** (piece #107) and the **Bearing** (piece #116). Ensure **O-Rings** (pieces #117 and 94) are properly installed.

NOTE: Ensure **Thrust Sleeve** engages the splines on the top of the **Stem Nut** (piece #20)—**Thrust Sleeve** will not rotate if not engaged properly.

3. Clean **Housing** (piece #2), flange, and mounting flange of the **Spring Housing** (piece #3).
4. Install **Spring Housing** (piece #3) without any gasket. Measure the gap between the **Spring Housing** (piece #3) and the **Housing** (piece #2).
5. Remove **Spring Housing** (piece #3). Install a **Gasket** (piece #66) between **Housing** and **Spring Housing**.

NOTE: The **Gasket** thickness should be the same as the gap measured in Step 4, plus an allowance for the compressibility of the gasket material used. If an exact gasket thickness can not be obtained, use the next higher thickness gasket available.

6. Replace the **Thrust Sleeve Bearing Cartridge** (piece #106) along with the **Belleville Springs** (piece #109—4 washers), and the **Belleville Spring Shim** (piece #108).
7. Inspect to ensure **O-Ring** (piece #118) is properly installed in the **Spring Housing** (piece #3). Install **Spring Housing**.

Figure 8.2 – SB-0 Parts Diagram

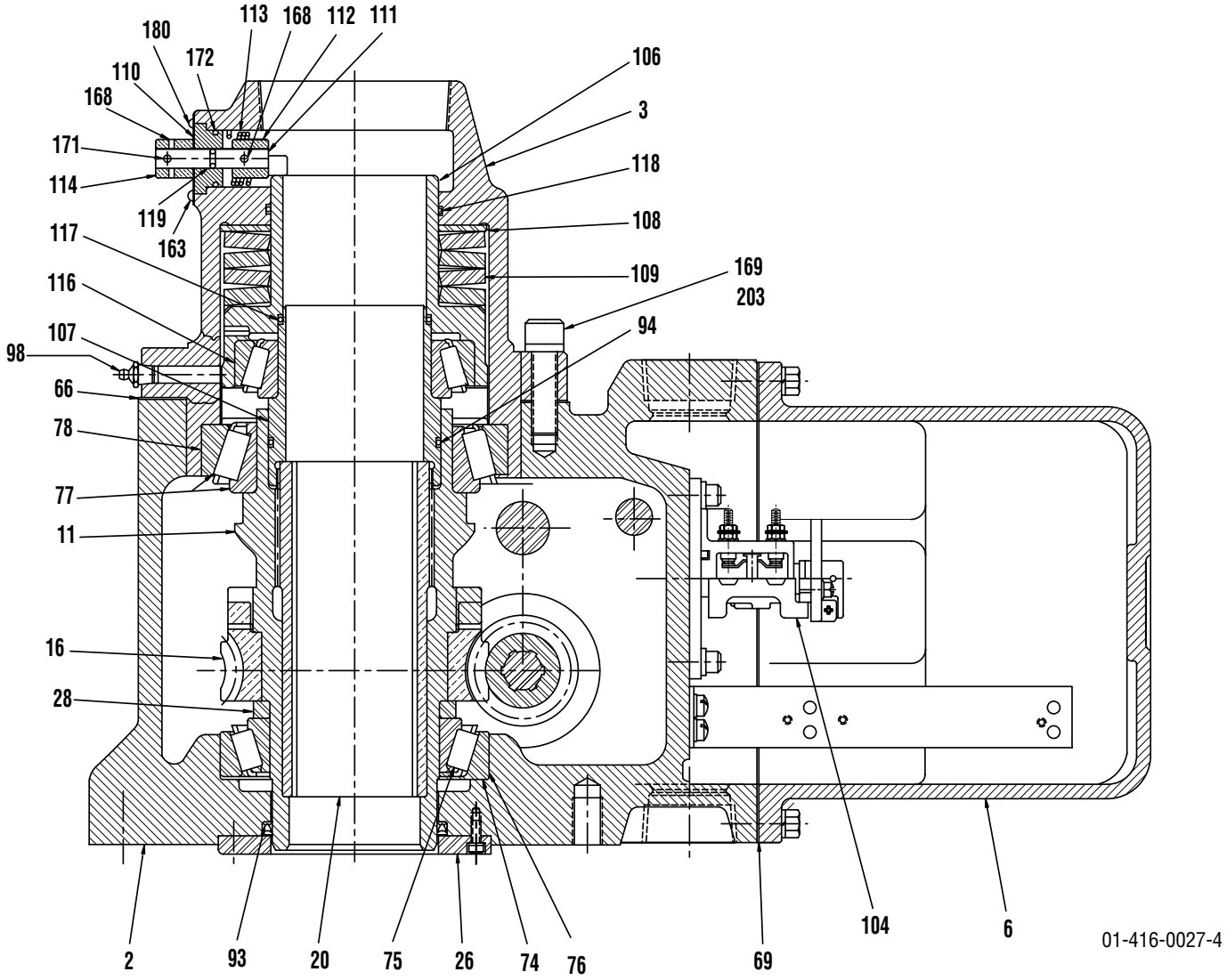

Table 8.2 – SB-0 Parts List

Piece	Quantity	Description
2	1	Housing
3	1	Spring Housing
6	1	Geared Limit Switch Compartment Cover
11	1	Drive Sleeve
16	1	Worm Gear
20	1	Stem Nut
26	1	Seal Retainer Plate
28	1	Spacer
66	1	Spring Housing Gasket
69	1	Limit Switch Compartment Cover Gasket
74	1	Bearing Shim Set
75	1	Bearing Cone
76	1	Bearing Cup
77	1	Bearing Cone
78	1	Bearing Cup
93	1	Quad Ring
94	1	O-Ring
98	1	Grease Fitting
104	1	Torque Switch
106	1	Thrust Sleeve Bearing Cartridge
107	1	Thrust Sleeve
108	1	Belleville Spring Shim
109	5	Belleville Springs
110	1	Indicator Dial Plate
111	1	Indicator Shaft
112	1	Indicator Lever
113	1	Indicator Spring
114	1	Indicator Pointer
116	1	Bearing Cup
117	1	O-Ring
118	1	O-Ring
119	1	O-Ring
163	1	Plug
168	2	Roll Pin
169	8	Socket Head Cap Screw
171	1	Socket Head Set Screw
172	1	O-Ring
180	4	Drive Screw
203	8	Lockwasher

8.3 SB-1

⚠ WARNING: See Section 4.1 and 4.2 on Safety Precautions and Safety Practices before proceeding with disassembly.

⚠ WARNING: Extreme caution should be used in the disassembly and reassembly of the spring compensator assembly.

The SB-1 actuator is a basic SMB-1 actuator with the housing cover, drive sleeve, and locknut modified to provide spring compression to the stem nut. The disassembly/assembly procedure for the SMB-0 is applicable (**Section 7.3.1**, **SMB-0, 1, 2, 3, 4, and 4T Disassembly** and **Section 7.3.2**, **SMB-0, 1, 2, 3, 4, and 4T Reassembly**), with the following procedures replacing Step 11 and stem nut removal procedure.

8.3.1 SB-1 Disassembly/Stem Nut Removal

Piece numbers refer to **Figure 8.3**.

1. Remove the **Spring Housing** (piece #159).
2. Remove the **Spring Housing Adapter** (piece #156).
3. Remove the **Thrust Spring Bearing Cartridge** (piece #151). The **Belleville Springs** (piece #153), **Seal Bushings** (piece #160) and **Belleville Spring Shim** (piece #154) will come off with the **Thrust Spring Bearing Cartridge**.
4. Remove the **Thrust Sleeve** (piece #147). Be careful not to loosen or damage the **Quad Ring** (piece #150). The **Bearing** (piece #146) will come out with the **Thrust Sleeve** (piece #147).
5. Remove the **Bearing Retainer** (piece #155). Remove the **Drive Sleeve** (piece #11) in accordance with Step 12 of **Section 7.3.1**, **SMB-0, 1, 2, 4, and 4T Disassembly**. If only the **Stem Nut** (piece #20) is to be removed, see Step 6.
6. If the actuator is not on the valve, the **Stem Nut** (piece #20) is accessible. If the actuator is on the valve, bolt the **Bearing Retainer** (piece #155) to the housing using two 5/8” x 11 UNC x1-1/4” long bolts.
   a. Place the actuator in hand operation.
   b. Rotate the **Handwheel** in the direction to effect a downward movement of the stem—usually the close direction. The **Stem Nut** will climb up the stem until it clears its splines.
   c. Rotate the **Stem Nut** off the stem.

8.3.2 SB-1 Reassembly/Stem Nut Installation

Piece numbers refer to **Figure 8.3**.

1. Replace the **Stem Nut** (piece #20).
   a. If the actuator is not on the valve, the **Stem Nut** will drop in the **Drive Sleeve** (piece #11) until it bottoms out on the shoulder in the bottom of the **Drive Sleeve**. Ensure splines are engaged.
   b. If the actuator is mounted on the valve, thread the **Stem Nut** (piece #20) down the stem until the splines hit. Put the actuator in manual operation. Rotate the **Handwheel** in the direction to move the stem upward—usually the open direction. The **Stem Nut** will lower as the **Handwheel** turns, until it bottoms out on the shoulder in the **Drive Sleeve** bottom and the stem starts to move up.
2. Replace the **Thrust Sleeve** (piece #147) and the **Bearing** (piece #146). Ensure **O-Ring** (piece #148) and **Quad Ring** (piece #150) are properly installed. Ensure the **Thrust Sleeve** engages the splines on the top of the **Stem Nut**. The **Thrust Sleeve** will not rotate if engaged improperly.
3. Replace the **Thrust Spring Bearing Cartridge** (piece #151) along with the **Belleville Springs** (piece #153) and **Belleville Spring Shim** (piece #154). Ensure the **Belleville Springs** are stacked as indicated in **Figure 8.3**. Ensure the **O-Ring** (piece #162) is installed in the **Thrust Sleeve**.
4. Install the **Spring Housing Adapter** (piece #156) using a 1/32" gasket.
5. Ensure the **Seal Bushing** (piece #160) and the **O-Ring** (piece #161) are properly installed in the **Spring Housing** (piece #159).
6. Install the **Spring Housing** (piece #159) using a 1/32" gasket.

Figure 8.3 – SB-1 Parts Diagram

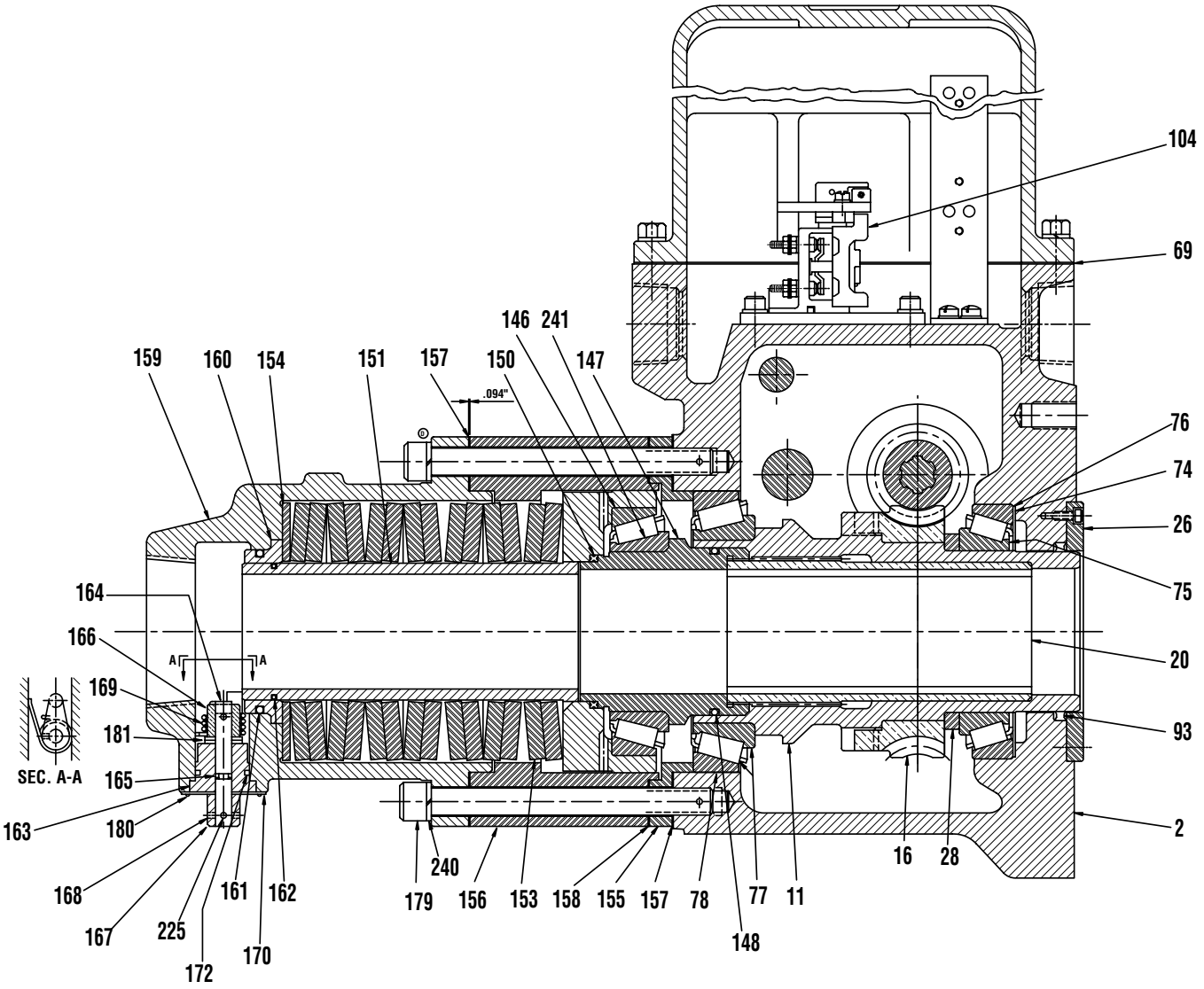

01-416-0028-4

Table 8.3 – SB-1 Parts List

Piece	Quantity	Description
2	1	Housing
11	1	Drive Sleeve
16	1	Worm Gear
20	1	Stem Nut
26	1	Seal Retainer Plate
28	1	Spacer
69	1	Limit Switch Compartment Cover Gasket
74	1	Bearing Shim
75	1	Bearing Cone
76	1	Bearing Cup
77	1	Bearing Cone
78	1	Bearing Cup
93	1	Quad Ring
104	1	Torque Switch
146	1	Bearing Cup
147	1	Thrust Sleeve
148	1	O-Ring
150	1	Quad Ring
151	1	Thrust Spring Bearing Cartridge
153	14	Belleville Spring
154	1	Belleville Spring Shim
155	1	Bearing Retainer
156	1	Spring Housing Adapter
157	1	Housing Cover Gasket
158	1	Adapter Gasket
159	1	Spring Housing
160	1	Seal Bushing
161	1	O-Ring
162	1	O-Ring
163	1	Plug for Indicator Shaft
164	1	Roll Pin
165	1	O-Ring
166	1	Indicator Lever
167	1	Indicator Pointer
168	2	Roll Pin
169	1	Indicator Spring
170	1	Indicator Dial Plate
172	1	O-Ring
179	8	Socket Head Cap Screw
180	4	Drive Screw
181	2	Flat Washers
225	1	Socket Head Set Screw
240	8	Lockwasher
241	1	Bearing Cone

8.4 SB-2

⚠ WARNING: See Section 4.1 and 4.2 on Safety Precautions and Safety Practices before proceeding with disassembly.

⚠ WARNING: Extreme caution should be used in the disassembly and reassembly of the spring compensator assembly.

The SB-2 actuator is a basic SMB-2 actuator with the housing cover, drive sleeve, and locknut modified to provide spring compression to the stem nut. The disassembly/assembly procedure for the SMB-2 is applicable **(Sections 7.3.1**, **SMB-0, 1, 2, 3, 4, and 4T Disassembly** and **Section 7.3.2**, **SMB-0, 1, 2, 4, and 4T Reassembly**), with the following procedures replacing Step 11 and stem nut removal procedure.

8.4.1 SB-2 Disassembly/Stem Nut Removal

Piece numbers refer to **Figure 8.4**.

1. Remove **Spring Housing Cover** (piece #161).
2. Remove **Spring Cartridge** (piece #173), complete with **Belleville Springs** (piece #179), **Thrust Washers** (piece #178), **Thrust Limit Sleeve** (piece #199), and **Spring Retainer Cap** (piece #180).

NOTE: The spring assembly should not be disassembled unless absolutely necessary.

To disassemble the compensator spring cartridge:

a. Remove the **Spring Retainer Cap** (piece #180). Be careful to remove the set screws securing the **Spring Retainer Cap** to the **Spring Cartridge** before trying to remove locknut.
b. Lift off the **Thrust Washer** (piece #178), the **Belleville Springs** (piece #179), and the **Thrust Limit Sleeve** (piece #199).

To reassemble the Spring Cartridge:

a. Position the **Belleville Springs** (piece #179) between the two **Thrust Washers** (piece #178) as shown in **Figure 8.4**.
b. Thread **Spring Retainer Cap** (piece #180) onto the **Spring Cartridge** (piece #173) until it hits the shoulder on the cartridge.
c. Reinstall set screws or drill and tap for new set screw locations.

3. Remove the **Thrust Sleeve** (piece #168), complete with the **Bearing Cup** (piece #169) and the **Bearing Cone** (piece #170).
4. Read Step 6. Remove the **Spring Housing** (piece #163).
5. Remove the **Drive Sleeve** in accordance with Step 12 of **Section 7.3.1**, **SMB-0, 1, 2, 4, and 4T Disassembly**. If only the **Stem Nut** (piece #20) is to be removed, see Step 6.
6. If the actuator is not on the valve, lift the **Stem Nut** (piece #20) directly from the actuator. If the actuator is on the valve, bolt a support bar across the top of the actuator **Housing** to hold the **Bearing Cone** (piece #77) and the **Bearing Cup** (piece #78) in place.
   a. Place the actuator in hand operation.
   b. Rotate the **Handwheel** in the direction to effect a downward movement of the stem—usually the close direction. The **Stem Nut** will climb up the stem until it clears its splines.
   c. Rotate the **Stem Nut** off the stem.

8.4.2 SB-2 Reassembly/Stem Nut Installation

Piece numbers refer to **Figure 8.4**.

1. Replace the **Stem Nut** (piece #20).
   a. If the actuator is not on the valve, the **Stem Nut** will drop in the **Drive Sleeve** (piece #11) until it bottoms out on the shoulder of the **Drive Sleeve**. Ensure splines are engaged.
   c. If the actuator is mounted on the valve, thread the **Stem Nut** (piece #20) down the stem until the splines hit. Put the actuator in manual operation. Rotate the **Handwheel** in the direction to move the stem upward—usually the open direction. The **Stem Nut** will lower as the **Handwheel** turns, until it bottoms out on the shoulder in the **Drive Sleeve** and the stem starts to move up.
2. Replace the **Thrust Sleeve** (piece #168) and the **Bearing Cup and Cone** (piece #169 and #170). Ensure the **Quad Ring** (piece #194) and the **O-Ring** (piece #176) are properly installed. Ensure the **Thrust Sleeve** engages the splines on the top of the **Stem Nut**—the **Thrust Sleeve** will not rotate if engaged improperly.
3. Clean the **Housing** (piece #2), flange, and mounting flange of the **Spring Housing** (piece #163).
4. Install the **Spring Housing** without any gasket. Measure the gap between the **Spring Housing** (piece #163) and the **Housing** (piece #2).
5. Remove the **Spring Housing** (piece #163). Install a gasket between the **Housing** and the **Spring Housing**. The gasket thickness should be the same as the gap measured in Step 4, plus an allowance for the compressibility of the gasket material used. If an exact gasket thickness can not be obtained, use the next higher thickness gasket available.
6. Install **Spring Housing** (piece #163).
7. Replace **Spring Cartridge** (piece #173) as an assembly. Install **O-Ring** (piece #197) in **Spring Cartridge Cap**.
8. Install **Spring Housing Cover** (piece #161) using a gasket of sufficient thickness, including allowance for compressibility, to fill any gap between the **Spring Housing Cover** and the **Spring Housing**.

Figure 8.4 – SB-2 Parts Diagram

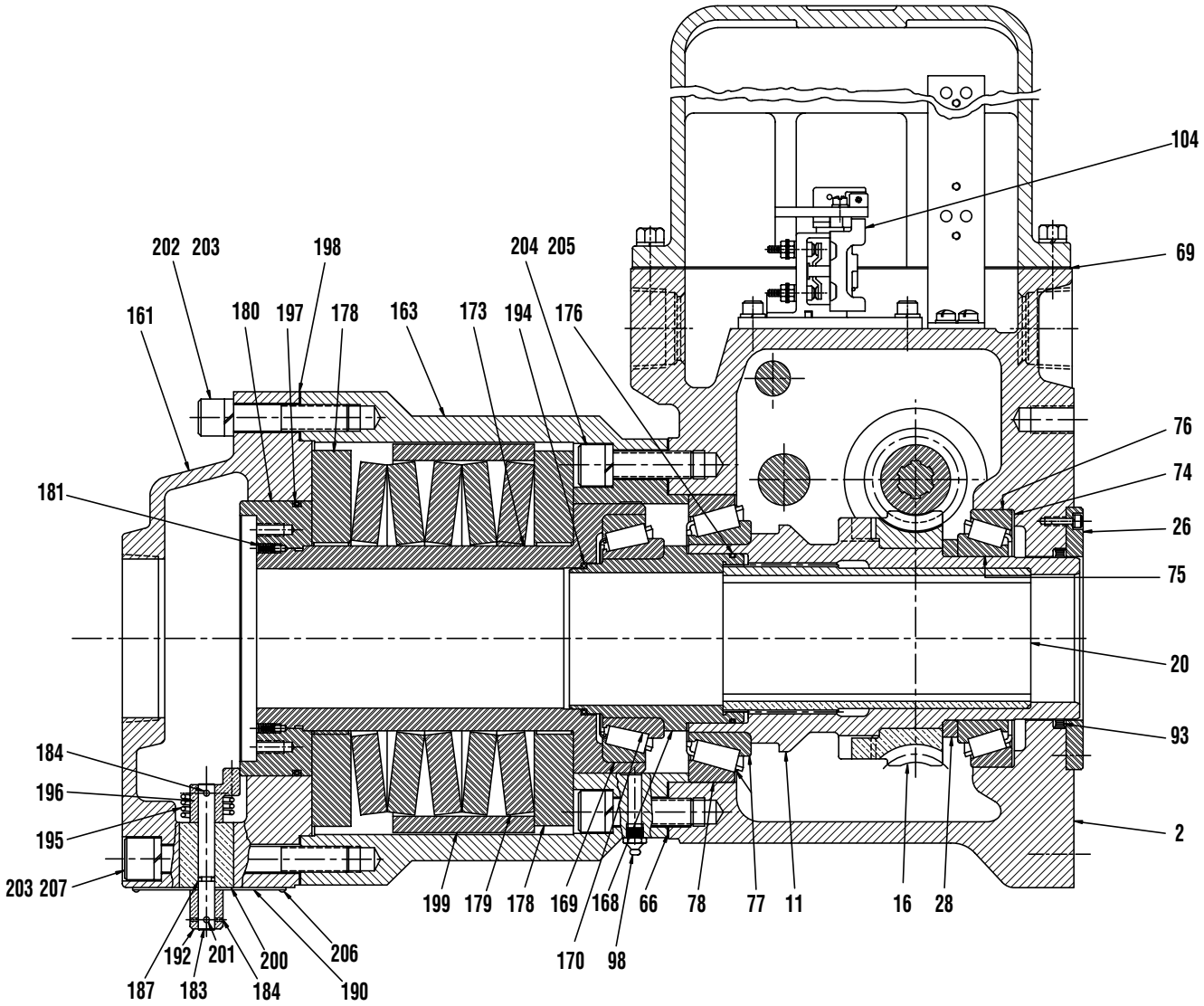

01-416-0030-4

Table 8.4 – SB-2 Parts List

Piece	Quantity	Description
2	1	Housing
11	1	Drive Sleeve
16	1	Worm Gear
20	1	Stem Nut
26	1	Seal Retainer Plate
28	1	Spacer
66	1	Spring Housing Gasket
69	1	Limit Switch Compartment Cover Gasket
74	1	Bearing Shim
75	1	Bearing Cone
76	1	Bearing Cup
77	1	Bearing Cone
78	1	Bearing Cup
93	1	Quad Ring
98	1	Grease Fitting
104	1	Torque Switch
161	1	Spring Housing Cover
163	1	Spring Housing
168	1	Thrust Sleeve
169	1	Bearing Cup
170	1	Bearing Cone
173	1	Spring Cartridge
176	1	O-Ring
178	2	Thrust Washer
179	5	Belleville Spring
180	1	Spring Retainer Cap
181	2	Socket Head Set Screw
183	1	Indicator Shaft
184	1	Roll Pin
187	1	O-Ring
190	1	Indicator Dial
192	1	Indicator Pointer
194	1	Quad Ring
195	1	Indicator Spring
196	1	Indicator Lever
197	1	O-Ring
198	1	Spring Cover Gasket
199	1	Thrust Limit Sleeve
200	1	Indicator Shaft Bushing
201	2	Socket Head Set Screw
202	11	Socket Head Cap Screw
203	12	Lockwasher
204	12	Lockwasher
205	12	Socket Head Cap Screw
206	2	Drive Screw
207	1	Socket Head Cap Screw

8.5 SB-3

⚠ WARNING: See Section 4.1 and 4.2 on Safety Precautions and Safety Practices before proceeding with disassembly.

⚠ WARNING: Extreme caution should be used in the disassembly and reassembly of the spring compensator assembly.

The SB-3 actuator is a basic SMB-3 actuator with the housing cover, drive sleeve, and locknut modified to provide spring compression to the stem nut. The disassembly/assembly procedure for the SMB-3 is applicable (**Sections 7.3.1**, **SMB-0, 1, 2, 3, 4, and 4T Disassembly** and **Section 7.3.2**, **SMB-0, 1, 2, 3, 4, and 4T Reassembly**), with the following procedures replacing Step 11 and stem nut removal procedure.

8.5.1 SB-3 Disassembly/Stem Nut Removal

Piece numbers refer to **Figure 8.5**.

1. Remove the **Spring Housing** (piece #140).
2. Remove the **Spring Cartridge** (piece #149), complete with **Belleville Springs** (piece #152), **Thrust Washers** (pieces #150 and #153), **Deflection Limit Sleeve** (piece #161), and **Spring Retainer Cap** (piece #166).

NOTE: The spring assembly should not be disassembled unless absolutely necessary.

To disassemble the Spring Cartridge:

a. Remove the **Spring Retainer Cap** (piece #166). Be careful to remove the set screws securing the **Spring Retainer Cap** to the **Spring Cartridge** before trying to remove **Spring Retainer Cap** .
b. Lift off **Thrust Washer** (piece #150), **Belleville Springs** (piece #152), **Deflection Limit Sleeve** (piece #161) and **Thrust Washer** (piece #153).

To reassemble the Spring Cartridge:

a. Position **Belleville Springs** (piece #152) between the two **Thrust Washers** (pieces #153 and #150) as shown in **Figure 8.5**.
b. Thread the **Spring Retainer Cap** (piece #166) onto the **Spring Cartridge** (piece #149) until the **Spring Retainer Cap** touches the **Thrust Washer**. Add 3/4 turn.
c. Reinstall set screws or drill and tap for new set screw locations.
d. Install **Deflection Limit Sleeve** (piece #161).

3. Remove the **Bearing Cartridge** (piece #154), complete with **Bearing Cup and Cone** (pieces #147 and #148).
4. Remove **Centering Ring** (piece #167) and the **Drive Sleeve Bearing Cartridge** (piece #3).
5. Remove **Drive Sleeve** (piece #11) in accordance with Step 12 of **Section 7.3.1**, **SMB-0, 1, 2, 4, and 4T Disassembly**. If only the **Stem Nut** (piece #20) is to be removed, see Step 6.
6. If the actuator is not on the valve, the **Stem Nut** (piece #20) is accessible. If the actuator is on the valve, bolt the **Drive Sleeve Bearing Cartridge** (piece #3) to the **Housing** (piece #2) using two 7/8” UNC x 9 UNC x 1-1/2" long bolts to hold the **Bearing Cone and Cup** (pieces #77 and #78) in place.
   a. Place the actuator in hand operation.
   b. Rotate the **Handwheel** in the direction to effect a downward movement of the stem—usually the close direction. The **Stem Nut** will climb up the stem until it clears its splines.
   c. Rotate the **Stem Nut** off the stem.

8.5.2 SB-3 Reassembly/Stem Nut Installation

Piece numbers refer to **Figure 8.5**.

1. Replace the **Stem Nut** (piece #20).
   a. If the actuator is not on the valve, the **Stem Nut** will drop in the **Drive Sleeve** (piece #11) until it bottoms out on the shoulder of the **Drive Sleeve**. Ensure splines are engaged.

b. If the actuator is mounted on the valve, thread the **Stem Nut** (piece #20) down the stem until the splines hit. Put the actuator in manual operation. Rotate the **Handwheel** in the direction to move the stem upward—usually the open direction. The **Stem Nut** will lower as the **Handwheel** turns, until it bottoms out on the shoulder in the **Drive Sleeve** and the stem starts to move up.

2. Replace the **Bearing Cartridge** (piece #154) and the **Bearing Cup and Cone** (pieces #147 and #148). Ensure **Quad Ring** (piece #168) and **O-Ring** (piece #163) are properly installed. Ensure the **Bearing Cartridge** engages the splines on the top of the **Stem Nut**—the **Bearing Cartridge** will not rotate if engaged properly.
3. Replace the **Centering Ring** (piece #167).
4. Replace the **Spring Cartridge** (piece #149) as an assembly along with the **Belleville Springs** (piece #152), **Thrust Washers** (pieces #150 and #153), and **Spring Retainer Cap** (piece #166).
5. Replace the **Deflection Limit Sleeve** (piece #161).
6. Verify that the **O-Ring** (piece #160) is properly installed in the **Spring Retainer Cap** (piece #166). Install the **Spring Housing** (piece #140), adding a gasket for sufficient thickness to fill in the gap "a," making an allowance for the gasket material compressibility.

Figure 8.5 – SB-3 Parts Diagram

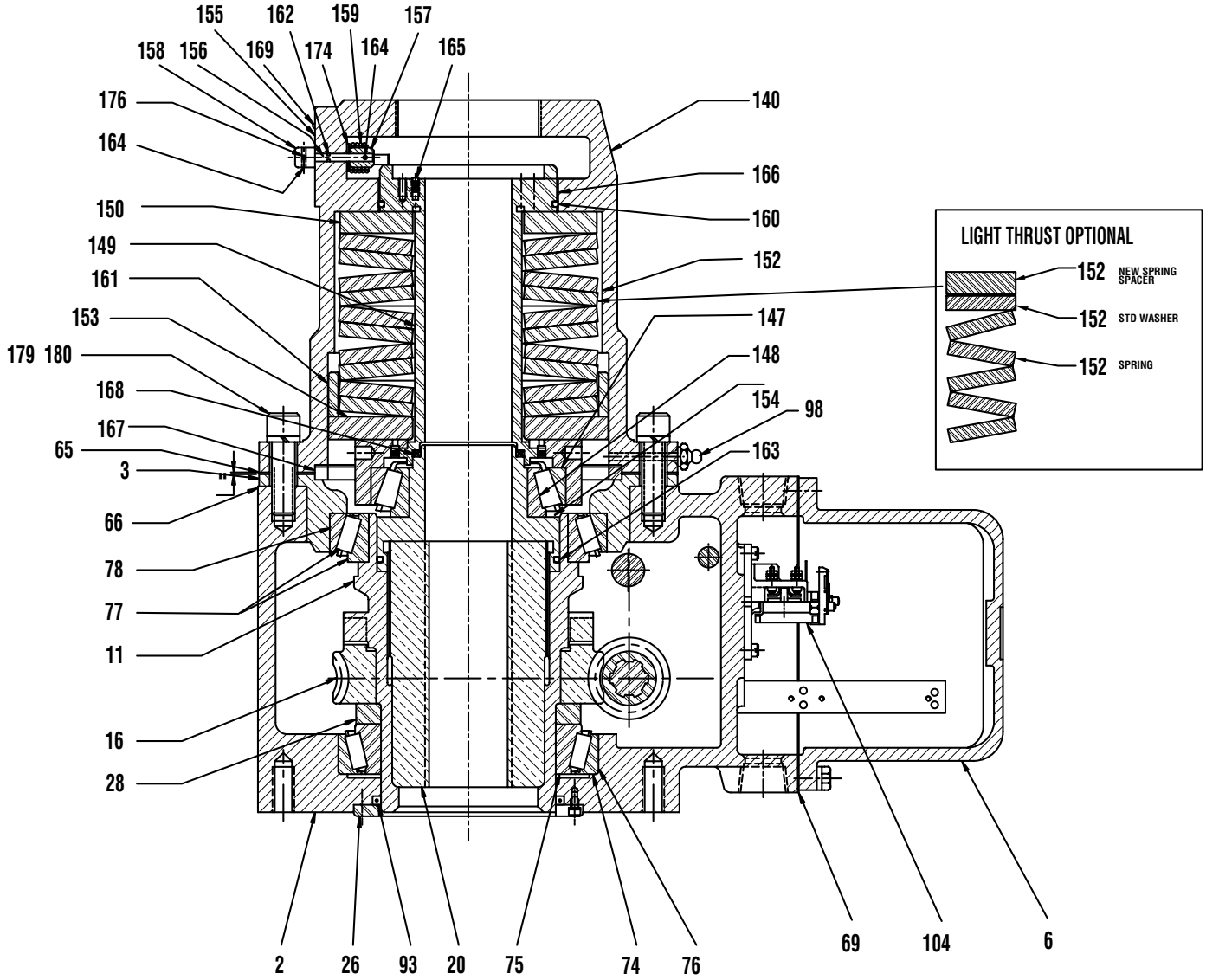

01-416-0029-4

Table 8.5 – SB-3 Parts List

Piece	Quantity	Description
2	1	Housing
3	1	Drive Sleeve Bearing Cartridge
6	1	Limit Switch Compartment Cover
11	1	Drive Sleeve
16	1	Worm Gear
20	1	Stem Nut
26	1	Seal Retainer Plate
28	1	Worm Gear Spacer
65	1	Spring Housing Gasket
66	1	Housing Cover Gasket
69	1	Limit Switch Compartment Cover Gasket
74	1	Bearing Shim
75	1	Bearing Cone
76	1	Bearing Cup
77	1	Bearing Cone
78	1	Bearing Cup
93	1	Quad Ring
98	1	Grease Fitting
104	1	Torque Switch
140	1	Spring Housing
147	1	Bearing Cup
148	1	Bearing Cone
149	1	Spring Cartridge
150	1	Thrust Washer
152	10	Belleville Spring
153	1	Thrust Washer
154	1	Bearing Cartridge
155	1	Indicator Dial
156	1	Indicator Shaft
157	1	Indicator Lever
158	1	Indicator Pointer
159	1	Indicator Spring
160	1	O-Ring
161	1	Deflection Limit Sleeve
162	1	O-Ring
163	1	O-Ring
164	2	Roll Pin
165	1	Socket Head Set Screw
166	1	Spring Retainer Cap
167	1	Centering Ring
168	1	Quad Ring
169	4	Drive Screw
174	5	Flat Washer
176	1	Socket Head Set Screw
179	12	Socket Head Cap Screw
180	12	Lockwasher
235	1	Spring Spacer

8.6 SB-4

⚠ WARNING: See Section 4.1 and 4.2 on Safety Precautions and Safety Practices before proceeding with disassembly.

⚠ WARNING: Extreme caution should be used in the disassembly and reassembly of the spring compensator assembly.

The SB-4 actuator is a basic SMB-4 actuator with the housing cover, drive sleeve, and locknut modified to provide spring compression to the stem nut. The disassembly/assembly procedure for the SMB-4 is applicable (**Sections 7.3.1**, **SMB-0, 1, 2, 3, 4, and 4T Disassembly** and **Section 7.3.2**, **SMB-0, 1, 2, 3, 4, and 4T Reassembly**), with the following procedures replacing Step 11 and stem nut removal procedure.

8.6.1 SB-4 Disassembly/Stem Nut Removal

Piece numbers refer to **Figure 8.6**.

1. Remove the **Spring Housing** (piece #163).
2. Remove the **Thrust Washer** (piece #178).
3. Remove the **Spring Cartridge Assembly** including the **Spring Cartridge** (piece #173), **Belleville Spring** (piece #179), and **Spring Cartridge Cover** (piece #180).
4. Remove the **Bearing Cartridge** (piece #168). **Bearing Cone** (piece #169) and **Bearing Cup** (piece #170) will come out with the **Bearing Cartridge**.
5. Remove the **Housing Cover Cartridge** (piece #155).
6. Remove the **Drive Sleeve** (piece #11) in accordance with Step 12 of **Section 7.3.1**, **SMB-0, 1, 2, 3, 4, and 4T Disassembly**. If only the **Stem Nut** (piece #20) is to be removed, see Step 7.
7. If the actuator is not on the valve, the **Stem Nut** (piece #20) is accessible. If the actuator is on the valve, bolt the **Housing Cover Cartridge** (piece #155) to the **Housing** (piece #2) using two 1"-8 UNC x 2.5" long bolts.
   a. Place the actuator in hand operation.
   b. Rotate the **Handwheel** in the direction to effect a downward movement of the stem—usually the close direction. The **Stem Nut** will climb up the stem until it clears its splines.
   c. Rotate the **Stem Nut** off the stem.

8.6.2 SB-4 Reassembly/Stem Nut Installation

Piece numbers refer to **Figure 8.6**.

1. Replace the **Stem Nut** (piece #20).
   a. If the actuator is not on the valve, the **Stem Nut** will drop in the **Drive Sleeve** (piece #11) until it bottoms out on the shoulder of the **Drive Sleeve**. Ensure splines are engaged.
   b. If the actuator is mounted on the valve, thread the **Stem Nut** (piece #20) down the stem until the splines hit. Put the actuator in manual operation. Rotate the **Handwheel** in the direction to move the stem upward—usually the open direction. The **Stem Nut** will lower as the **Handwheel** turns, until it bottoms out on the shoulder in the **Drive Sleeve** and the stem starts to move up.
2. Replace the **Bearing Cartridge** (piece #168), the **Bearing Cone** (piece #169), and the **Bearing Cup** (piece #170). Ensure the **O-Ring** (piece #175) and the **Quad Ring** (piece #176) are properly installed. Ensure the **Bearing Cartridge** engages the splines on the top of the **Stem Nut**—the **Bearing Cartridge** will not rotate if engaged improperly.
3. Replace the **Spring Cartridge** (piece #173) as an assembly with **Thrust Washer** (piece #178) installed in the bottom and the **Belleville Spring** (piece #179) arranged as shown in **Figure 8.6**. Also include the **Spring Cartridge Cover** (piece #180) and the **O-Ring** (piece #181).
4. Replace the **Thrust Washer** (piece #178) on the top of the **Spring Cartridge** .
5. Replace the **Spring Housing** (piece #163) with a 1/32” gasket.
6. Remove the **Cover Plate** (piece #188). Realign deflection indicator.
7. Pull the **Pointer** and the **Pointer Shaft** outward and move to “0” deflection.
8. Push the **Pointer** and the **Pointer Shaft** back in and replace the **Cover Plate** (piece #188).

Figure 8.6 – SB-4 Parts Diagram

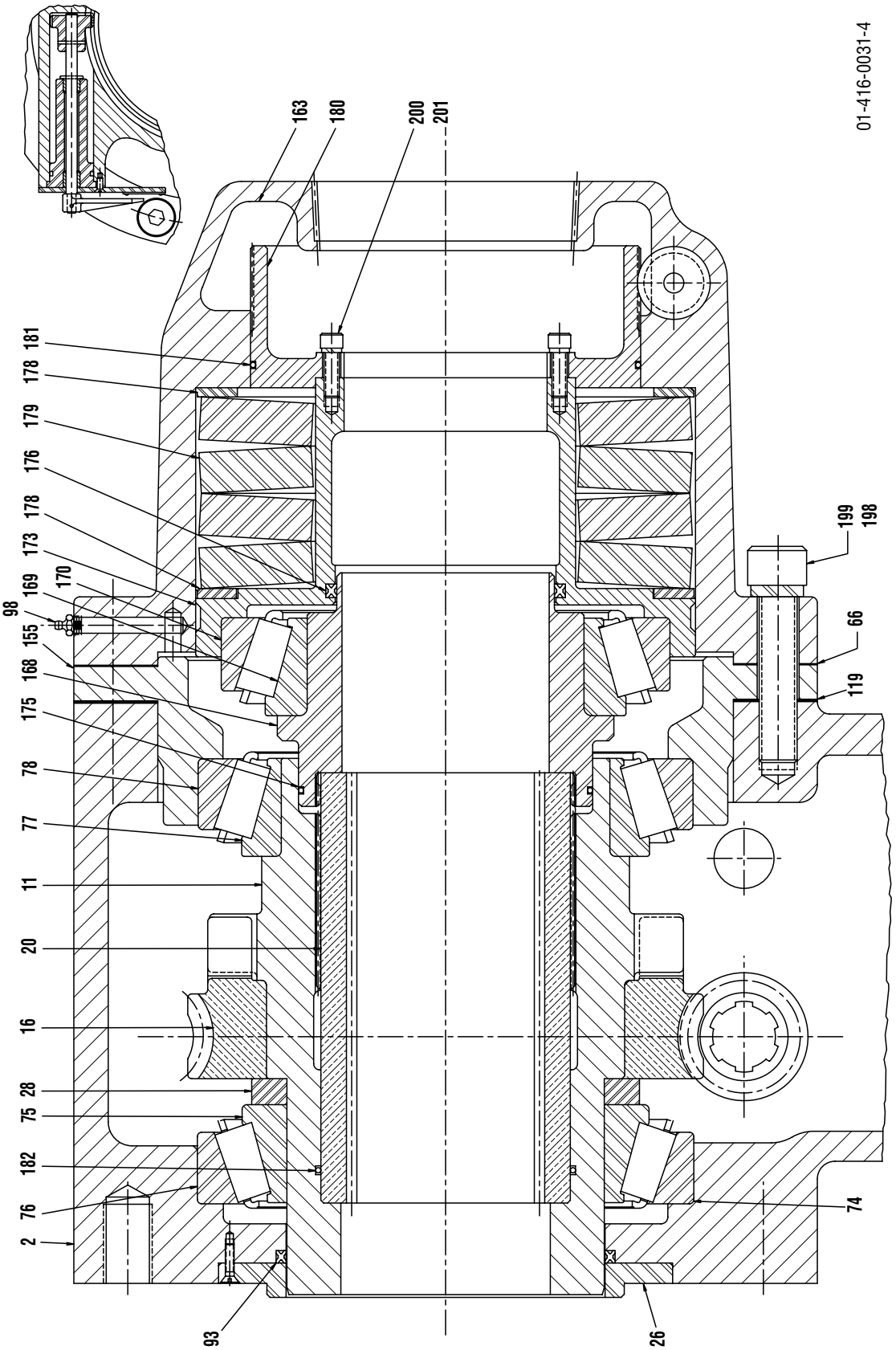

Table 8.6 – SB-4 Parts List

Piece	Quantity	Description
2	1	Housing
11	1	Drive Sleeve
16	1	Worm Gear
20	1	Stem Nut
26	1	Seal Retainer Plate
28	1	Worm Gear Spacer
66	1	Spring Housing Gasket
74	1	Bearing Shim
75	1	Bearing Cone
76	1	Bearing Cup
77	1	Bearing Cone
78	1	Bearing Cup
93	1	Quad Ring
98	1	Grease Fitting
119	1	Housing Gasket
155	1	Housing Cover Cartridge
163	1	Spring Housing
168	1	Bearing Cartridge
169	1	Bearing Cone
170	1	Bearing Cup
173	1	Spring Cartridge
175	1	O-Ring
176	1	Quad Ring
178	1	Thrust Washer
179	4	Belleville Spring
180	1	Spring Cartridge Cover
181	1	O-Ring
182	1	O-Ring
198	12	Socket Head Cap Screw
199	12	Lockwasher
200	6	Socket Head Cap Screw
201	6	Lockwasher

9 Troubleshooting

Symptom	Corrective Action
Geared limit switch fails to stop valve travel.	a. Verify that the control wiring and motor reversing contactor wiring are correct. b. Check the geared limit switch setting. See **Section 4.4, Setting Limit Switch**. c. Remove the limit switch gear box cover and inspect for damaged or broken gear teeth. See **Sections 7** and **8, SMB Disassembly and Reassembly** and **SB Disassembly and Reassembly**.
Unable to motor-operate the actuator.	a. Check the motor power and motor control circuits for supply and continuity. b. Verify that the supply voltage is in accordance with motor and controller nameplate rating. If OK, check the motor amperage load. c. If a stalled motor is indicated, turn the power OFF and operate the actuator by handwheel.
Excessive handwheel effort.	a. Inspect the valve stem for proper lubrication or damage. b. Check the valve packing gland. It may be too tight. Loosen the valve packing gland. c. Inspect the valve for proper lubrication. d. Check the stem nut for tightness on the valve stem. Loosen the stem nut on the valve stem. e. Inspect the valve for faulty or damaged parts.
Reversing starter contacts fail to close.	Check the line circuit breaker or fuses in the disconnect switch (if installed) for possible interruption of incoming line voltage. The holding coil may be open-circuited and, if so, should be replaced.
Pushbutton contacts not making proper contact when depressed.	Adjust the contacts for correct movement and proper contact pressure.
Overload relays are open.	Reset the relays. Continued tripping of the overload relays usually indicates trouble with the motor or improper sizing of the overload heater. See the electric motor nameplate for full load current.
Reversing starter contact movement is restricted.	a. Check for worn or damaged mechanical parts. b. Clean, adjust, and align all parts for free movement. c. Replace any defective parts. When replacing the contacts, the complete set of moving and stationary contacts should be changed along with springs to assure proper contact pressure.
Pushbutton contacts stick.	a. Trace out the connection of pushbutton contacts with the wiring diagram for actual installation. b. Adjust the contacts for free movement and normal contact pressure. c. Check the wiring for “sneak in” or grounded circuits and defective insulation.

10 How to Order Parts

To order parts or obtain further information for your Limitorque SMB or SB valve actuators, contact your local Limitorque distributor sales office, or:

Limitorque
5114 Woodall Road
P.O. Box 11318
Lynchburg, VA 24506-1318

Telephone (434) 528-4400
Fax (434) 845-9736
http://www.limitorque.com

All inquiries or orders must be accompanied by the following information:
1. Actuator Size
2. Limitorque Order Number
3. Limitorque Serial Number

When replacing space heaters provided in the limit switch compartment, select the heater size in accordance with **Table 10.1**.

Table 10.1 – Space Heater Size per Voltage Rating

Voltage	Watts	Resistance (ohms)
110/120	25	500/750
208/220	25	2100
380	25	7200
440	25	8500
550	25	15000

11 Regulatory Information

Declaration of Conformity

Application of Council Directive(s)

89/336/EEC; EMC Directive

98/37/EEC; Machinery Directive

Standard(s) to which Conformity is Declared

Machinery; EN 60204 EMC

- Emissions; EN 50081-1&2, EN 55011, CFR 47
- Immunity; EN 50082-1&2, IEC 801-3 & IEC 801-6 ESD; IEC 801-2
- EFT/Bursts; IEC 801-4
- Surge Immunity; IEC 801-5, ANSI/IEEE C62.41 Mains (power)
- Harmonics; MIL-STD-462, Method CSO1 & CSO2

Manufacturer's Name

Limitorque, a Flowserve Company

Manufacturer's Address

5114 Woodall Road
Lynchburg, VA 24506

Importer's Name

Limitorque, a Flowserve Company

Importer's Address

Abex Road
Newbury
Berkshire, RG14 5EY
England

Type and Description of Equipment

Valve Actuators

Model Number

SMB/SB Series

Note

Tested with Limitorque products only

I, the undersigned, hereby declare that the equipment specified above conforms to the above Directive(s) and Standard(s). List as follows:

(Signature)

Stuart Medford
(Full Name)

Regional Director
(Title)

Newbury, England
Place

June 1, 2000
Date

Limitorque
5114 Woodall Road, P.O. Box 11318
Lynchburg, VA 24506-1318
Phone 434 528 4400
Fax 434 845 9736
http://www.limitorque.com

Limitorque
Abex Road
Newbury
Berkshire, RG14 5EY
England
Phone 44-1-635-46999
Fax 44-1-635-36034

Limitorque Nippon Gear Co., Ltd.
Asahi-Seimei Bldg. 4th Floor
1-11-11 Kita-Saiwai, Nishi-Ku
Yokohama-Shi, (220-0004)
Japan
Phone 81-45-326-2065
Fax 81-45-320-5962

Limitorque India, Ltd.
15/4, Mile Stone
Mathura Road
Faridabad - 121002
India
Phone 91-129-2276586, 2276836
Fax 91-129-2277135

Flowserve Australia, Pty. Ltd.
14 Dalmore Drive
Scoresby, Victoria 3179
Australia
Phone 613-9729-2633
Fax 613-9729-2644

Limitorque Asia, Pte., Ltd.
12, Tuas Avenue 20.
Singapore 638824
Phone 65-6868-4628
Fax 65-6862-4940

Flowserve Corporation has established industry leadership in the design and manufacture of its products. When properly selected, this Flowserve product is designed to perform its intended function safely during its useful life. However, the purchaser or user of Flowserve products should be aware that Flowserve products might be used in numerous applications under a wide variety of industrial service conditions. Although Flowserve can (and often does) provide general guidelines, it cannot provide specific data and warnings for all possible applications. The purchaser/user must therefore assume the ultimate responsibility for the proper sizing and selection, installation, operation, and maintenance of Flowserve products. The purchaser/user should read and understand the Installation and Maintenance (I&M) instructions included with the product, and train its employees and contractors in the safe use of Flowserve products in connection with the specific application.

While the information and specifications contained in this literature are believed to be accurate, they are supplied for informative purposes only and should not be considered certified or as a guarantee of satisfactory results by reliance thereon. Nothing contained herein is to be construed as a warranty or guarantee, express or implied, regarding any matter with respect to this product. Because Flowserve is continually improving and upgrading its product design, the specifications, dimensions and information contained herein are subject to change without notice. Should any question arise concerning these provisions, the purchaser/user should contact Flowserve Corporation at any one of its worldwide operations or offices.

For more information about Flowserve Corporation, contact www.flowserve.com or call USA 1-800-225-6989.

FLOWSERVE CORPORATION
FLOW CONTROL DIVISION
Limitorque Actuation Systems
5114 Woodall Road
P.O. Box 11318
Lynchburg, VA 24506-1318
Phone 434 528 4400
Fax 434 845 9736
www.limitorque.com

© 2003 Flowserve Corporation, Irving, Texas, USA. Flowserve and Limitorque are registered trademarks of Flowserve Corporation.

140-11000 July 2003 Printed in USA