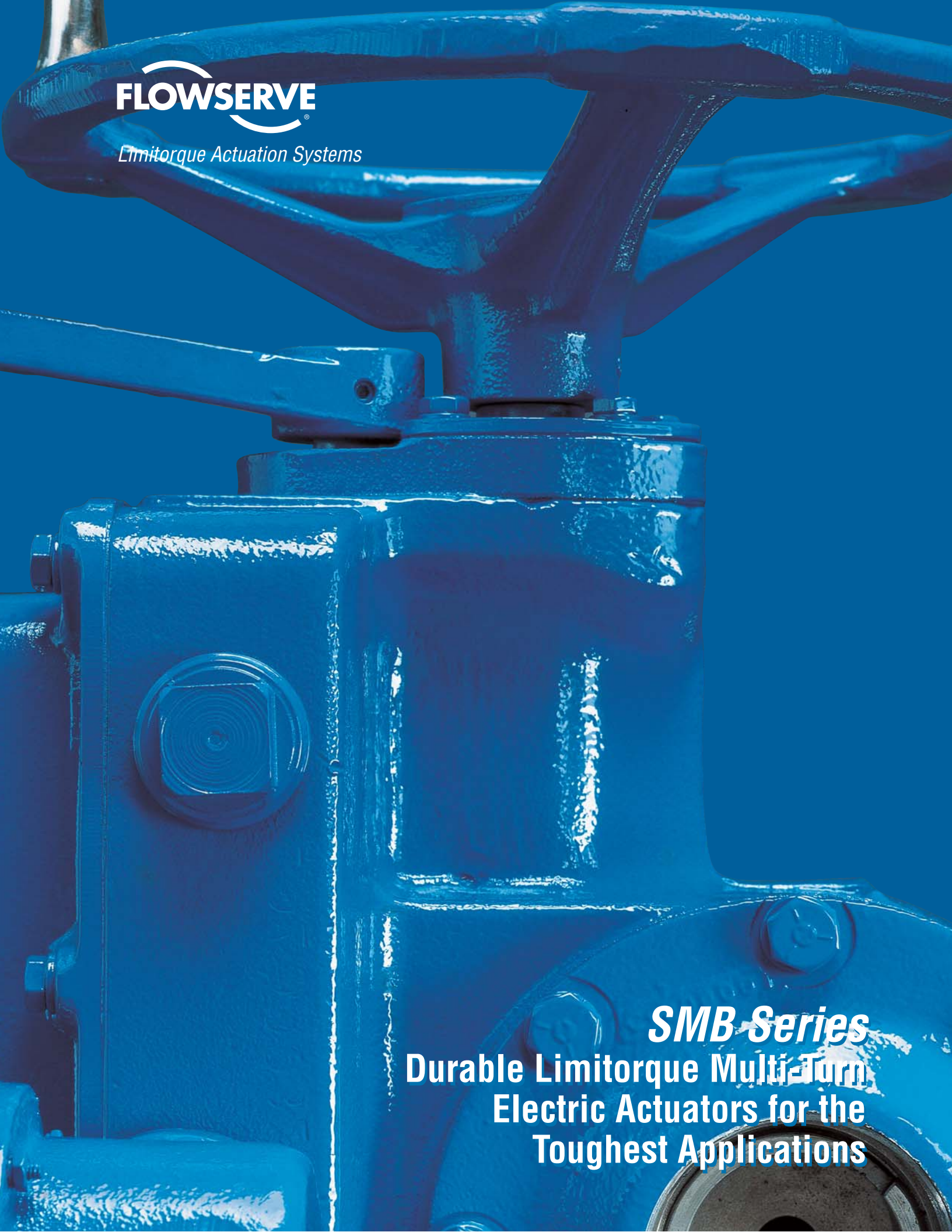

FLOWSERVE

Limitorque Actuation Systems

SMB Series

Durable Limitorque Multi-Turn Electric Actuators for the Toughest Applications

SMB multi-turn actuators:

when maximum

service life is a must

When an actuator offering unsurpassed strength and durability is required, choose a three-decade veteran of the nuclear power industry: the Limitorque SMB series. Extraordinarily solid construction gives these actuators a proven service life of more than 30 years. All SMB housings are rugged cast iron. Weatherproof construction is standard; other actuators are available for XP, Navy Class A, and nuclear requirements.

Clearly capable

The SMB series covers a broad scope of capabilities, producing torque ranging from 15 ft-lb (20 N m) to 60,000 ft-lb (81,349 N m), and handling stem thrusts up to 500,000 lb. (2,224 kN). As a result, the Limitorque SMB family makes valve control easier whenever the application demands maximum durability.

A proven performer in the most demanding fields.

With its durable cast-iron housing, the SMB has long been a mainstay of the nuclear power industry. It was the first actuator to be tested and approved for nuclear power plant reactor containment service. SMB actuators are in service in every major nuclear power generation facility in the world, and on most of the world's nuclear naval vessels.

And while the SMB is a veteran of the nuclear power field, this actuator's brawn has proved valuable to many other industries as well. It can capably serve in such applications as:

- Oil and gas wells and platforms
- Oil and gas pipelines
- Petroleum distribution terminals and tank farms
- Petrochemical refineries and hydrocarbon processing plants
- Chemical and specialty chemical plants
- Fossil fuel and nuclear power plants
- Hydroelectric facilities
- Water and wastewater treatment plants
- Dams and flood gates
- Aqueducts and other water distribution systems
- Steam distribution systems
- Mines and ore refineries
- Steelworks and other metals processing plants
- Pulp/paper mills
- Food processing

The SMB has earned its credentials in some of the most critical and strenuous applications around the world. More than 400 Limitorque actuators are at work on every nuclear aircraft carrier—many of them SMBs. For the Metropolitan Water District of Southern California, Limitorque actuators operate the massive 50-ton, 10-foot diameter butterfly valves controlling the flow of water into Los Angeles.

And 300 feet beneath the streets of New York City, Limitorque actuators control 96-inch water valves that are subjected to 750,000 ft-lb of torque.

Advanced adaptability

Spring-compensated versions of the SMB (designated SB and SBD), are available for applications where thermal expansion may pose a jammed-valve risk, or where valve discs are subject to extremely high-speed closure.

The SMB is also a perfect choice for customizing to meet special requirements. Many SMBs have been adapted to control mechanical equipment other than valves in applications requiring precise, powerful linear or rotary motion.

Engineered for reliable, long-term performance.

Encased in a rugged cast-iron housing, the SMB is built for exceptional durability inside and out.

At the core of the SMB is a double-reduction gear set (helical and worm), available in several combinations, that assures exemplary performance and eliminates “speed vs. torque” sizing trade-offs.

For positive, reliable actuation, a “hammer-blow” feature allows the motor to reach full speed before the load is engaged—enabling the actuator to apply appropriate force to the valve shaft. The power of the SMB is tamed by its automatic torque-limiting feature, which de-energizes the motor in the event of an obstruction to prevent damage to the valve.

A geared limit switch controls valve travel during both opening and closing movements of the valve stem. (This limit switch also activates position indicator lights for “open” and “closed” status.) The SMB’s position and torque limit switches are housed in a compartment designed to give technicians easy access to the switches and wiring terminals for simpler installation, startup, and maintenance.

From end to end, the SMB embodies sensible design and solid construction.

This cutaway diagram highlights just a few features that contribute to the outstanding reliability of the SMB.

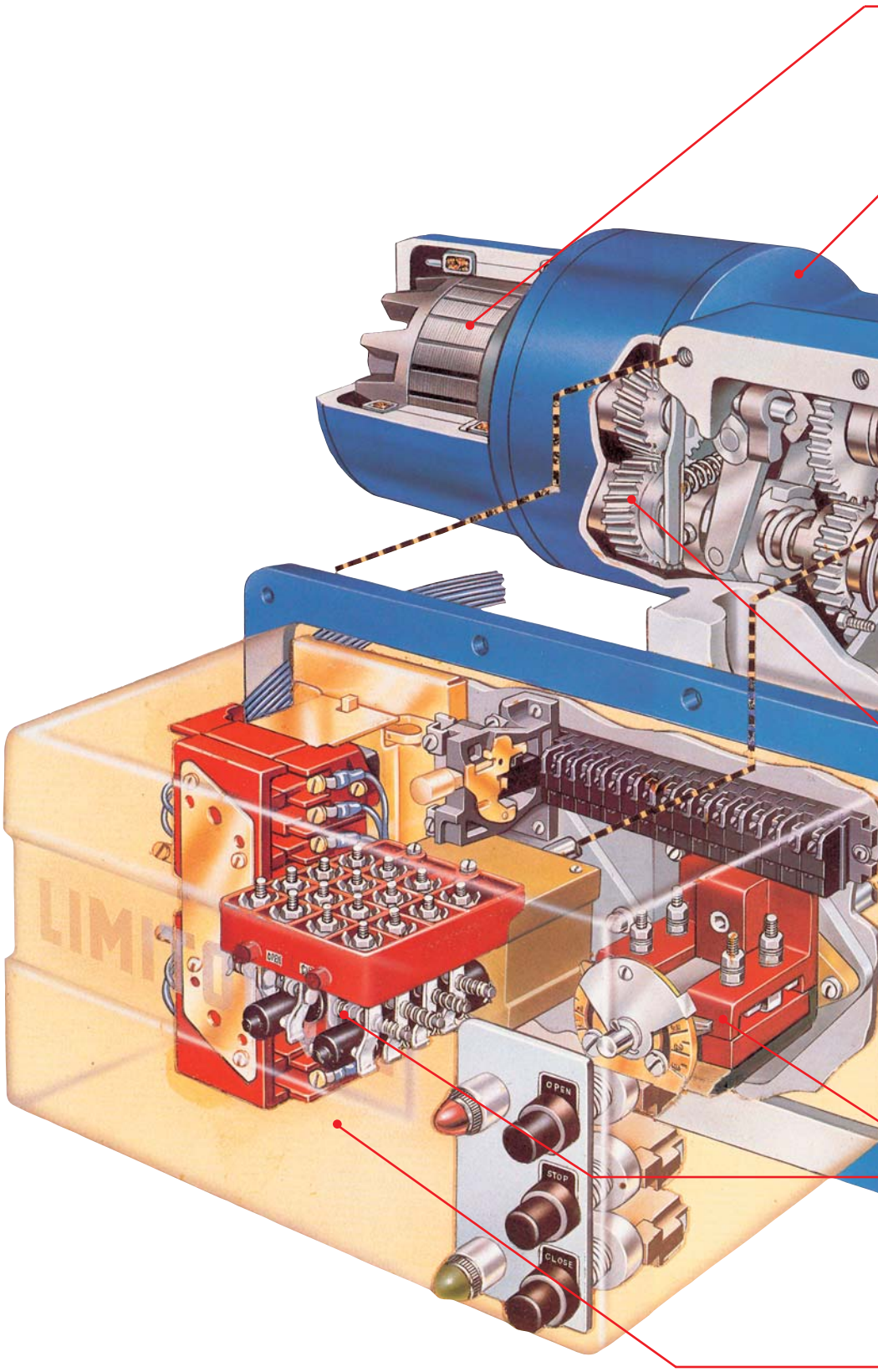

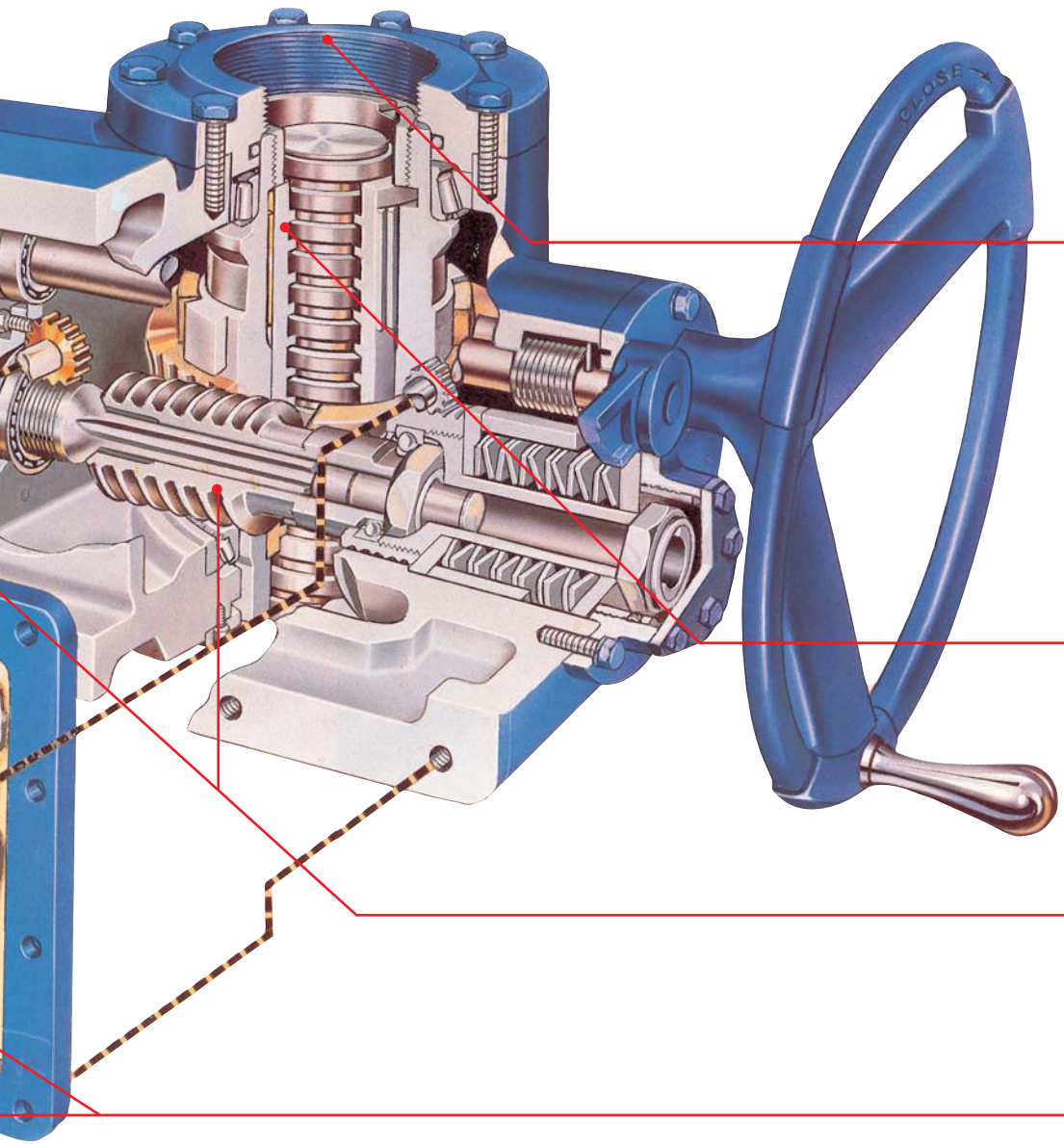

Motor disengages during handwheel operation; can be declutched for manual operation at any time.

SMB actuators offer nuclear, weatherproof, submersible, or explosion-proof construction.

Optional SB (single-compensating) or SBD (double-compensating) spring assemblies can be added to the gear housing for high-temperature or high-speed applications.

Insertable stem nut permits relocation of actuator to another valve without major disassembly.

Double reduction (helical and worm) gear set.

Position and torque limit switches rated at 600 volts, 6 amps.

Breathers, drains, and space heaters available for control compartment.

A single family of actuators capable of handling an extraordinarily broad range of applications

• **SMB-000 and 00** The smaller SMB's contain all of the main features of the larger SMB actuators, but are designed for valves requiring smaller operating torque and thrust.

• **SMB-0 through SMB-3** These larger SMB actuators are designed to accept larger stem capacities and develop more power. Like other members of the SMB line, these can be safely operated manually in the event of power interruption.

• **SMB-4 and SMB-5** The SMB-4 and 5 offer unequaled capacity for operating large, high-pressure valves. The SMB-5 is available in an economical torque-only configuration, without thrust bearings. This actuator, the SMB-5T, transmits only torque to the valve stem. In this application, thrust must be taken by thrust bearings built into the valve yoke.

• **SB and SBD options** The SB and SBD variations of the standard SMB actuator incorporate a spring-loaded stem nut that permits reliable operation in high-speed or high-temperature service situations. The SB design allows for thermal expansion and contraction of the valve stem and actuator stem nut to maintain proper operaton of the valve in high valve temperature applications.

The SB's spring compensation package helps absorb the seating shock accompanying high-speed operation of certain gate and globe valves. The spring assembly allows the SB's stem nut to float upward, absorbing the seating shock caused by rapid closing of the valve. (The springs can also expand to ensure the valve remains firmly seated.) This impact-dampening capability ensures longer life for valves and enables the SB actuators to function at speeds as high as three times normal rates.

In the SBD (double compensating) configuration, the stem nut can float both upward and downward in response to thermal fluctuations or high speed torque seating. SBD is the choice for stem contraction and torque back-seating applications.

The SB/SBD actuators have the same torque and thrust ratings, gear ratios, and electrical options as the SMB line. They also share the same mounting bases as the standard SMB actuators. This allows SB/SBD actuators to be interchanged with comparably sized SMB actuators in the event that a change in valve conditions requires the use of a spring-compensated actuator.

The SMB family

SMB-000 and 00

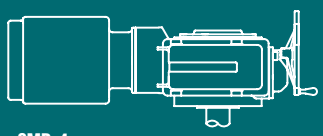

SMB-4

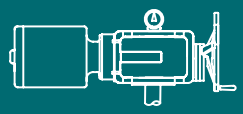

SMB-0 through 3

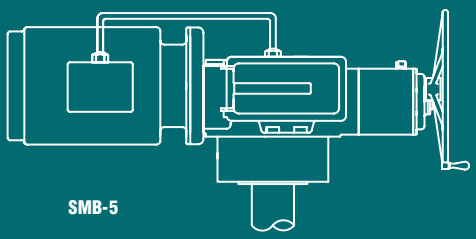

SMB-5

SB and SBD optional packages

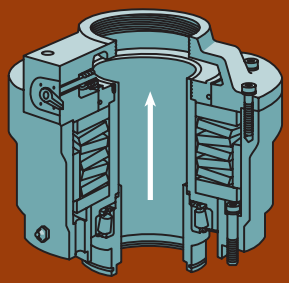

SB (single compensating)

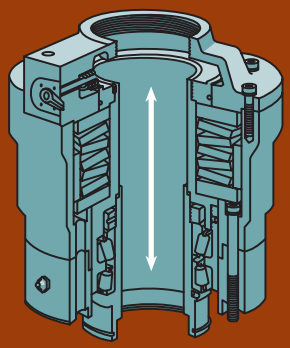

SBD (double compensating)

A typical SB configuration

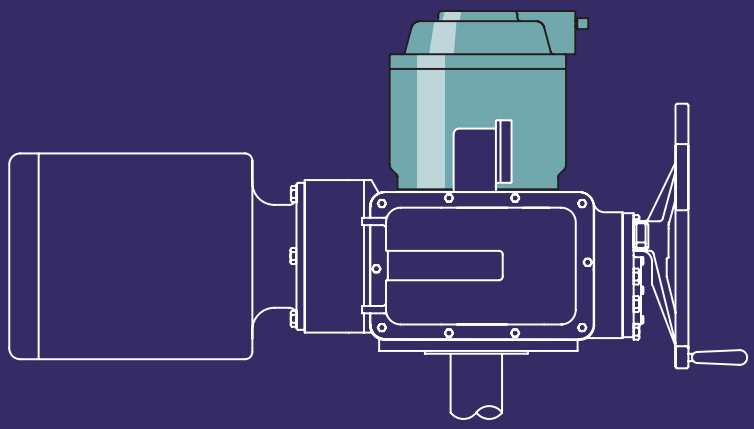

Choices to make valve control easier … from near or far

The SMB series uses close-coupled pilot devices, such as indicating lights and selector switches, for open, stop, and closed local operation. The SMB's integrated controls can provide output signals to a control room for remote operation.

All SMBs are available with optional integral controls and other features built into the motor/geared limit switch compartment:

- integral reversing motor controllers
- position transmitters
- space heaters
- control voltage transformers
- breathers and drains

(Special electrical packages are available for most control voltages.)

Motors to meet customer needs around the world
Choose from an extensive selection of motors to suit numerous speed and voltage requirements—with Class B, F, H, or nuclear service, high-temperature, radiation-resistant insulation.

A time-saving design detail
All SMB actuators have an insert stem nut that allows the actuators to be transferred from one valve to another without major disassembly. This logical design can save a significant amount of labor should relocation of the SMB to a different valve be required.

Compatible with all types of valves
The SMB easily handles gate, globe, plug, ball, and butterfly valves—and also specialized valves and mechanisms, such as sluice gates and shipboard watertight doors.

SMBs mount directly to gate and globe valves. Butterfly, ball, and plug valves are typically motorized by mounting the SMB to an additional gear operator to obtain a gear ratio suitable for quarter-turn applications. The SMB accommodates all Limitorque manual operators and torque reducers, including the HBC, WTR, and PT operators for quarter-turn application, and the B320 for Multi-turn applications.

Whatever the valve, the SMB reliably controls valve movement, provides constant seating torque, and automatically compensates for valve wear—so you have long-term assurance that the valve is absolutely tight on each closure.

And by protecting all of the valve's operating parts from torque and thrust overload, the SMB can prevent damaged valve seats, stems, and discs.

Options

Top-mounted and side-mounted mechanical dial position indicators (MDPI) adjust for 360 viewing.

Control Stations

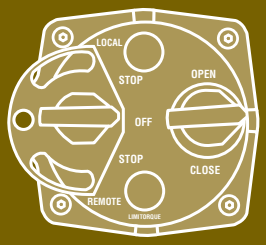

Valve types

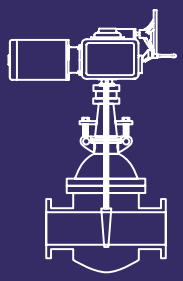

SMB mounted to wedge gate

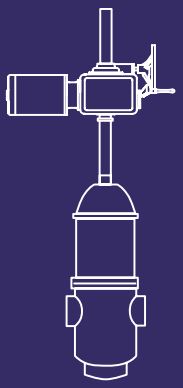

SMB mounted to thru-conduit gate valve

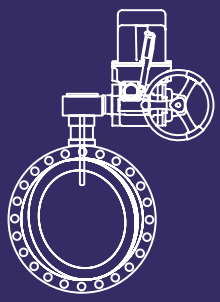

SMB/WTR mounted to butterfly valve

SMB/Gearhead combinations

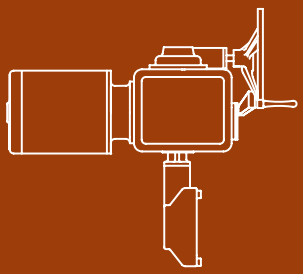

Multi-turn SMB/B320

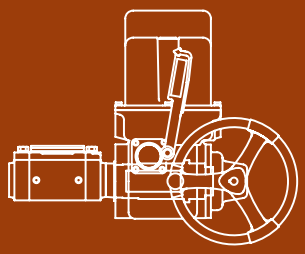

Quarter-turn SMB/HBC, WTR, or PT

SMB standard product specification

Gear housing
Housing material – cast iron

Lubrication – MOV long-life EP, NLGI grade 0 grease

Gear reduction – Double reduction type: worm and helical gearing

Worm gear – alloy bronze

Worm – alloy steel

Helical gears – heat-treated steel

Motor
Designation – Example: 60/4P refers to "60 foot-pound – four pole". Four pole is either 1800 RPM (60 Hz) or 1500 RPM (50 Hz); two pole is either 3600 RPM (60 Hz) or 3000 RPM (50 Hz).

Type – Squirrel cage induction

Power supply – suitable for 3/60/230, 460, or 575; 3/50/380; or 3/50/415.

Duty – nominal is 15 minutes

Dynamic torque – nominal 20% of start torque

Insulation – Class B standard

Heater – 120 VAC

Limit switch
Type – gear-driven, snap-acting switch, nuclear grade

Contacts – 16 contacts (4 train) nuclear grade

Contact rating – 600 volts per ICS-125.6. Current rated 6 amps resistive and 60 amps inrush at 120 VAC

Torque switch
Contacts – One SPST contact each for open and closed direction dedicated to actuator torque protection.
Nuclear grade

Rating – 600 volts per ICS-125.6. Current rated 6 amps resistive and 60 amps inrush at 120 VAC

Seals
Viton

Enclosure
WP actuators – suitable for NEMA 4

XP actuators – suitable for Class 1, Groups C and D, Division 1 service and Class II, Groups E, F, and G

Mounting base
Supplied to MSS (English taps) standard

Paint
LPS-129. Color blue standard. Valspar epoxy/polyurethane.

Temperature rating
-20°F to 150°F (-29°C to 66°C)

Actuator nameplate
Includes the point of manufacture, actuator size, order number, serial number, and space for customer tag information. The nameplate also includes the CE stamp. The nameplate is located on the back of the actuator opposite the limit switch compartment.

Motor nameplate
The motor nameplate includes: ID number, start torque, run torque, enclosure type, RPM, volts, full load amps, locked rotor amps, insulation class, duty, horsepower, service factor, phase, cycles, motor code, ambient temperature, and connection diagram.

XP nameplate
Actuator can be nameplated as Class 1, Groups C and D, Division 1 and Class II, Groups E, F, and G; FM or CSA label.

Controls
NCU (No Controls Actuator) – No additional controls included

INT (Integral Controls) – Includes transformer and reversing contactor

SMB commercial and nuclear options product specification

Local continuous position indication
Local position indicator that shows continuous valve position via a dial that is labeled 0-100% OPEN. Indicator is driven by a dedicated gear set that is selected per the application. The SMB-000/00 includes window mounted dial in MDPI housing bolted on the back of the actuator. The SMB-0-5 includes window mounted dial in MDPI housing close-coupled to actuator housing.

Local/remote indication
Includes the Local Continuous Position Indicator with a 1000 ohm potentiometer. The pot is used to transmit valve position to a remote location. One or two pots may be included.

Local/remote nuclear 2000 ohm potentiometer
Includes the Local Continuous Position Indicator with a 2000 ohm, radiation-resistant potentiometer. The pot is used to transmit valve position to a remote location.

Handwheel spur
A spur gear attachment that may be added to the actuator to reduce the effort required to operate the handwheel, but requiring more turns.

Optional handwheels
Used to reduce the effort required to operate the handwheel.

SB/SBD spring compensation
SB type spring-compensated package for use on high-speed, high-temperature torque-seated applications.

Control Station
Includes three-position selector switch (open, stop, close), two indicating lights (open, intermediate, close indication), and a three-position selector switch (local, off, remote).

Motor
Option DC motors are available for some sizes.

Routine motor test

Tests are conducted in accordance with NEMA MG-1 and IEEE-112.

Other XP categories

Consult factory.

Note: All options are non-safety related.

SMB nuclear product specification

Gear housing
Housing material – cast iron

Lubrication – MOV long-life EP, NLGI grade 0 grease

Gear reduction – Double reduction type: worm and helical gearing.

Worm gear – alloy bronze

Worm – alloy steel

Helical gears – heat-treated steel

Motor
Designation – Example: 60/4P refers to “60 foot pound – four pole”. Four pole is either 1800 RPM (60 Hz) or 1500 RPM (50 Hz); two pole is either 3600 RPM (60 Hz) or 3000 RPM (50 Hz).

Type – Squirrel cage induction

Power supply – suitable for 3/60/230, 460, or 575; 3/50/380; or 3/50/415.

Duty – nominal is 15 minutes
125/250 VDC, 5 minute duty
Nuclear grade

Dynamic torque – nominal 20% of start torque

Insulation – Class RH

Routine motor test, motor “T” drains

Limit switch
Type – gear-driven, snap-acting switch, nuclear grade

Contacts – 16 contacts (4 train) nuclear grade

Contact rating – 600 volts per ICS-125.6. Current rated 6 amps resistive and 60 amps inrush at 120 VAC

Torque switch
Contacts – One SPST contact each for open and closed direction dedicated to actuator torque protection. Nuclear grade Rating – 600 volts per ICS-125.6. Current rated 6 amps resistive and 60 amps inrush at 120 VAC

Wire
Rockbestos SIS

Seals
Viton

Enclosure
All actuators are suitable for inside or outside containment safety-related service. Three-phase design actuators are qualified per IEEE 323, IEEE 344, and IEEE 382 per Limitorque Test Reports 600376 (BWR) and 600456 (PWR). DC “RH” design actuators are qualified per IEEE 323 and IEEE 382 per Limitorque Test Report B0009.

Mounting base
Supplied to MSS (English taps) standard

Paint
Sandblast and prime coating of LPS-102 A inorganic zinc primer

Actuator nameplate
Includes the point of manufacture, actuator size, order number, serial number, and space for customer tag information. The nameplate also includes the CE stamp. The nameplate is located on the back of the actuator, opposite the limit switch compartment.

Motor nameplate
The motor nameplate includes: ID number, start torque, run torque, enclosure type, RPM, volts, full load amps, locked rotor amps, insulation class, duty, horsepower, service factor, phase, cycles, motor code, ambient temperature, and connection diagram.

SMB performance ratings

Commercial service ratings

Model	Output Speed Range	Max Torque Rating ft-lb	Max Torque Rating N m	Max Thrust Rating lb.	Max Thrust Rating kN
SMB-000	12-250	110/120	149/163	8000	36
SMB-00	10-250	260	353	14,000	62
SMB-0	10-250	700	949	24,000	107
SMB-1	10-250	1100	1491	45,000	200
SMB-2	10-250	1950	2644	70,000	311
SMB-3	10-250	4200	5694	140,000	623
SMB-4	10-250	8300/6600/4100	11,253/8948/5559	250,000	1112
SMB-5 & 5T	12-55	20000	27,116	500,000 (-5 only)	2224
SMB-5XT	12-55	60000	N/A	N/A	N/A

Note: Maximum torque rating is output speed dependent.

Maximum stem capacity

	Two-piece nut design (drive sleeve and stem nut)			One-piece design (drive sleeve)		
	Max threaded	Max bore and keyway		Max threaded	Max bore and keyway	
Model	Inch	Inch	mm	Inch	Inch	mm
SMB-000	1.375	1.125 w/ 1/4 x 3/32	26.0 w/ 8 x 3.5	1.5	1.250 w/ 1/4 x 1/8	31.0 w/ 8 x 3.5
SMB-00	1.75	1.500 w/ 3/8 x 1/8	37.0 w/ 10 x 4	2	1.750 w/ 3/8 x 3/16	44.5 w/ 14 x 4.5
SMB-0	2.375	1.875 w/ 1/2 x 3/16	47.6 w/ 14 x 4.5	2.75	2.313 w/ 5/8 x 7/32	58.8 w/ 18 x 5.5
SMB-1	2.875	2.438 w/ 5/8 x 7/32	61.9 w/ 18 x 5.5	3.25	2.750 w/ 5/8 x 7/32	68.5 w/ 20 x 6
SMB-2	3.5	2.875 w/ 3/4 x 1/4	73.0 w/ 20 x 6	3.875	3.250 w/ 3/4 x 1/4	82.0 w/ 22 x 7
SMB-3	5	4.250 w/ 1.0 x 3/8	108.0 w/ 28 x 8	5.75	4.750 w/ 1 1/4 x 7/16	120.7 w/ 32 x 9
SMB-4	5	4.500 w/ 1.0 x 1/2	114.3 w/ 32 x 9	6.75	6.000 w/ 1 1/2 x 1/2	152.4 w/ 40 x 11
SMB-5	6.25	5.250 w/ 1 1/4 x 7/16	133.4 w/ 36 x 10	8	7.000 w/ 1 3/4 x 5/8	177.8 w/ 45 x 12.5
SMB-5T	N/A	6.000 w/ 1 1/2 x 1/2	152.4 w/ 40 x 11	N/A	8.000 w/ 2.0 x 3/4	203.2 w/ 50 x 14
SMB-5XT	N/A	N/A		6.25	10.000 w/ 1 1/4 x 5/8	254.0 w/ 56 x 16

Available motors (ft-lb) and corresponding actuator weights (Note 1)

	Available motor		Weights[1]		+Adder for SB		+Adder for SBD	
Model	4P	2P	lb.	kg	lb.	kg	lb.	kg
SMB-000	2, 5	2	135	62	N/A	N/A	N/A	N/A
SMB-00	10, 15, 25	10, 25	200	90	65	30	100	46
SMB-0	10, 15, 25, 40	10, 15, 25	350	159	180	83	210	97
SMB-1	25, 40, 60	25, 40, 60	460	209	200	92	325	150
SMB-2	40, 60, 80	40, 60, 80	580	263	200	92	325	150
SMB-3	60, 80, 100, 150	60, 80, 100, 150	1200	553	500	230	825	380
SMB-4	60, 80, 100, 150, 200 (-4T), 250, 300	100, 150, 200, 250	2020	916	795	366	1285	591
SMB-5 & 5T	150, 200, 250, 300, 350, 400	150, 200, 250, 300, 350, 400	3375	1531	N/A	N/A	N/A	N/A
SMB-5XT	150, 200, 250, 300, 350, 400	150, 200, 250, 300, 350, 400	5875	2665	N/A	N/A	N/A	N/A

Note 1: With largest motor and no integral controls.

SB/SBD performance ratings

Commercial service ratings

	Ratio Range	Max Torque Rating		Max Thrust Rating	
		ft-lb	N m	lb.	kN
SB-00	all	260	353	14,000	62
SB-0	all	700	949	24,000	107
SB-1	all	1100	1491	45,000	200
SB-2	all	1950	2644	70,000	311
SB-3	all	4200	5694	140,000	623
SB-4	10.1–125/131.9–147.9/152.1–219.3	8300/6600/4100	5559/8948/11253	250,000 (-4 only)	1112

Maximum stem capacity (inches)

	SB	SBD
SB-00	1.25	1.25
SB-0	2.38	2.25
SB-1	2.63	2.50
SB-2	3.50	3.50
SB-3	4.00	3.50
SB-4	5.00	5.00

Available motors (ft-lb)

	4P	2P
SB-00	10, 15, 25	10, 25
SB-0	10, 15, 25, 40	10, 15, 25
SB-1	25, 40, 60	25, 40, 60
SB-2	40, 60, 80	40, 60, 80
SB-3	60, 80, 100, 150	60, 80, 100, 150
SB-4	100, 150, 200, 250, 300	100, 150, 200, 250

Mounting base and drive sleeves (all dimensions in inches)

	Pilot diameter	Pilot length	Mounting holes	# of holes and distance BC	Mounting base dia.
SMB-000	2.312	0.125	5/16-18 UNC x .63	(4) @90°, 3.250	4.88
SMB-00	3.750	0.125	5/8-11 UNC x 1.13	(4) @90°, 5.500	7
SMB-0	5.000	0.188	3/4-10 UNC x 1.00	(4) @90°, 6.500	8.25
SMB-1	6.000	0.188	5/8-11 UNC x 1.00	(8) @45°, 10.000	11.38
SMB-2	7.000	0.188	3/4-10 UNC x 1.13	(8) @45°, 11.75	13.5
SMB-3	8.500	0.188	7/8-9 UNC x 1.75	(8) @45°, 14.000	16
SMB-4	9.000	0.375	1 1/4-7 UNC x 2.00	(8) @45°, 16.000	18.75
SMB-5	13.000	0.438	1 1/2-6 UNC x 3.00	(12) @30°, 18.000	21
SMB-5T	18.001 C'bore	2.00 C'bore depth	1-8 UNC x 2.00	(16) @22.5°, 23.500	25.5
SMB-5XT	17.000 C'bore	.375 C'bore depth	1 1/16 dia. through holes	(16) @22.5°, 20.500	25.5

	Pilot diameter (mm)	Pilot length (mm)	Mounting holes (in.)	# of holes & distance BC (mm)	Mounting base dia. (mm)
SMB-000	58.72	3.18	5/16-18 UNC x .63	(4) @90°, 82.55	123.95
SMB-00	95.25	3.18	5/8-11 UNC x 1.13	(4) @90°, 139.7	177.8
SMB-0	127.0	4.78	3/4-10 UNC x 1.00	(4) @90°, 165.1	209.55
SMB-1	152.4	4.78	5/8-11 UNC x 1.00	(8) @45°, 254.0	289.05
SMB-2	177.8	4.78	3/4-10 UNC x 1.13	(8) @45°, 298.45	342.9
SMB-3	215.9	4.78	7/8-9 UNC x 1.75	(8) @45°, 355.6	406.4
SMB-4	228.6	9.53	1 1/4-7 UNC x 2.00	(8) @45°, 406.4	476.25
SMB-5	330.2	11.13	1 1/2-6 UNC x 3.00	(12) @30°, 457.2	533.4
SMB-5T	457.4 C'bore	50.8 C'bore depth	1-8 UNC x 2.00	(16) @22.5°, 596.9	647.7
SMB-5XT	431.9 C'bore	9.53 C'bore depth	1 1/16 dia. through holes	(16) @22.5°, 520.7	647.7

Nominal Center of Gravity for SMB/SB Actuators

4T geared limit switch, MDPI, standard cast iron control compartment cover

SB-000

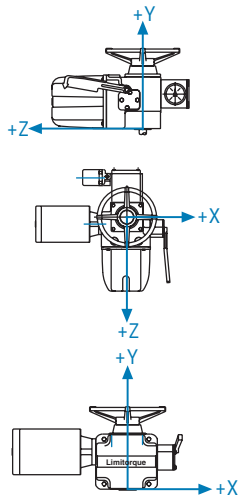

SMB-000/00

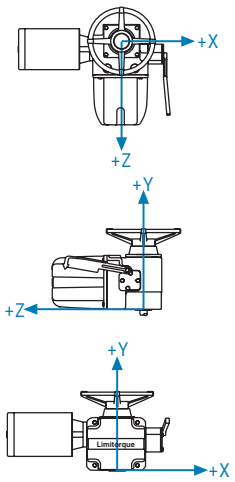

SB-00

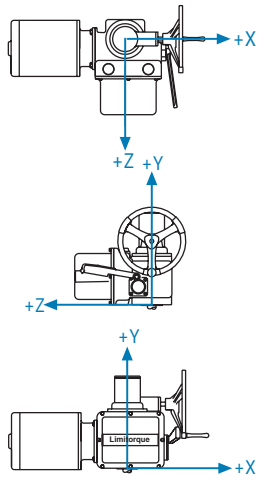

SMB-00

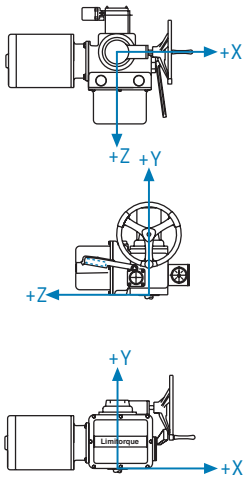

SB-0 through 4

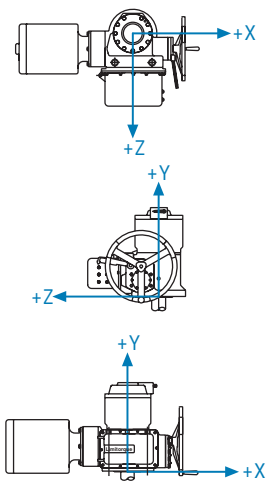

SMB-0 through 5

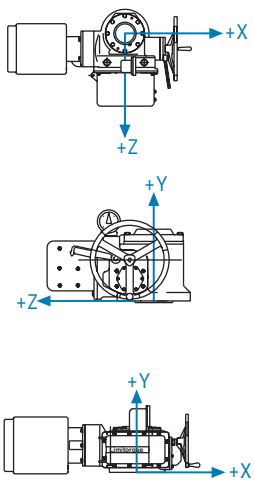

With side-mounted handwheel

Motor Size	Motor Speed	Handwheel	X	Y	Z
ft-lb.	RPM	dia. (in.)			
SMB-00					
5	1800, 3600	12	-1.25	5.25	3.00
7.5	3600	12	-1.25	5.25	3.00
10	1800	12	-1.25	5.25	3.00
10, 15	3600	12	-1.75	5.25	2.75
15	1800	12	-1.50	5.25	3.00
25	1800	12	-2.00	5.25	2.75
SMB-0					
7.5	3600	12	-1.50	5.50	4.50
10	1800	10	-1.50	5.50	4.50
10, 15	3600	12	-2.00	5.50	4.50
15	1800	12	-1.75	5.50	4.50
25	1800, 3600	12	-2.25	5.50	4.50
40	1800	12	-2.50	5.50	4.50
SMB-1					
15	3600	12	-2.00	5.25	4.00
25	1800, 3600	12	-2.00	5.25	4.00
40	1800, 3600	12	-2.50	5.25	4.00
60	1800	12	-2.50	5.25	4.00
60	3600	12	-5.75	5.25	4.00
SMB-2					
25	1800, 3600	18	-1.25	6.00	3.75
40	1800, 3600	18	-1.50	6.00	3.75
60	1800	18	-1.50	6.00	3.75
60	3600	18	-4.50	6.25	4.00
80	1800, 3600	18	-4.50	6.25	4.00
SMB-3					
40	1800, 3600	24	-2.50	4.25	7.75
60	1800	24	-2.50	4.25	7.75
60	3600	24	-3.75	4.50	7.75
80	1800, 3600	24	-3.75	4.50	7.75
100	1800	24	-3.75	4.50	7.75
100	3600	24	-5.75	4.75	7.50
150	1800, 3600	24	-5.75	4.75	7.50
SMB-4					
80	1800, 3600	24	-6.25	7.25	6.75
100	1800	24	-6.25	7.25	6.75
100	3600	24	-7.75	7.50	6.75
150	1800, 3600	24	-7.75	7.50	6.75
200, 250	1800	24	-7.75	7.50	6.75
200, 250	3600	24	-14.00	7.75	6.75
300	1800	24	-14.00	7.75	6.75
SMB-5					
100, 150	1800, 3600	30	-0.25	13.25	4.50
150, 200, 250, 300	1800	30	-0.25	13.25	4.50
200	3600	30	-2.25	13.75	4.50
250, 300	3600	30	-2.25	13.75	4.50
350	1800	30	-2.25	13.75	4.50
400	3600	30	-4.50	14.00	4.50

With side-mounted handwheel

Motor Size	Motor Speed	Handwheel	X	Y	Z
ft-lb	RPM	dia. (in.)			
SB-00					
5	1800, 3600	12	-1.00	6.50	2.50
5, 7.5	3600	12	-1.00	6.50	2.50
10	1800	12	-1.00	6.50	2.50
10, 15	3600	12	-1.50	6.50	2.50
15	1800	12	-1.25	6.50	2.50
25	1800	12	-1.50	6.50	2.50
SB-0					
7.5	3600	12	-2.25	6.00	3.75
10	1800, 3600	12	-2.25	6.00	3.75
15	1800	12	-2.25	6.00	3.75
15	3600	12	-2.50	6.00	3.75
25	1800, 3600	12	-2.75	6.00	3.75
40	1800	12	-3.00	6.00	3.75
SB-1					
15	3600	12	-3.50	6.75	3.25
25	1800, 3600	12	-3.50	6.75	3.25
40	1800, 3600	12	-4.00	6.75	3.25
60	1800	12	-4.00	6.75	3.25
60	3600	12	-6.50	6.75	3.25
SB-2					
25	1800, 3600	18	-0.75	9.00	3.25
40	1800, 3600	18	-1.25	8.75	3.25
60	1800	18	-1.25	8.75	3.25
60	3600	18	-3.50	8.50	3.50
80	1800, 3600	18	-3.50	8.50	3.50
SB-3					
40	1800, 3600	24	-2.00	9.50	5.00
60	1800	24	-2.00	9.50	5.00
60	3600	24	-3.00	9.25	5.00
80	1800, 3600	24	-3.00	9.25	5.00
100	1800	24	-4.75	9.25	5.00
150	1800, 3600	24	-4.75	9.25	5.00
SB-4					
80	1800, 3600	24	-4.75	10.00	5.25
100	1800	24	-4.75	10.00	5.25
100	3600	24	-6.00	10.00	5.25
150	1800, 3600	24	-6.00	10.00	5.25
200, 250	1800	24	-6.00	10.00	5.25
200, 250	3600	24	-11.25	10.00	5.50
300	1800	24	-11.25	10.00	5.50

Note: For actuator weights see page 12.

SMB With top-mounted handwheel

Motor Size	Motor Speed	Handwheel	X	Y	Z
ft-lb	RPM	dia. (in.)			
SMB-000					
2	1800, 3600	10	-1.75	4.00	3.75
5	1800	10	-2.00	4.00	3.75
SMB-00					
5, 10	1800	10	-2.00	4.75	3.00
5, 7.5	3600	10	-2.00	4.75	3.00
10, 15	3600	10	-2.50	4.75	2.75
15	1800	10	-2.25	4.75	3.00
25	1800	10	-2.75	4.75	2.75

SB With top-mounted handwheel

Motor Size	Motor Speed	Handwheel	X	Y	Z
ft-lb	RPM	dia. (in.)			
SB-000					
2	1800, 3600	10	-2.00	4.00	3.25
5	1800	10	-2.25	4.00	3.25

SMB-000 Standard Actuator

Top View

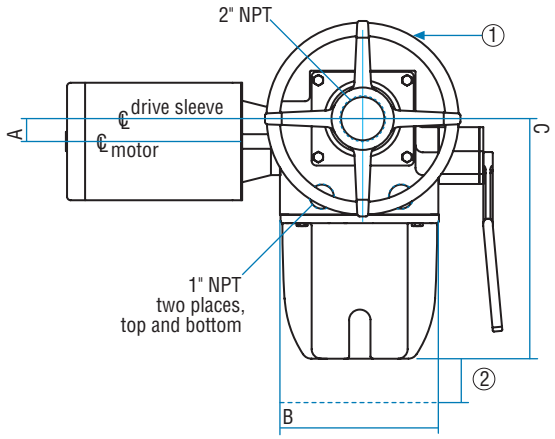

Front View

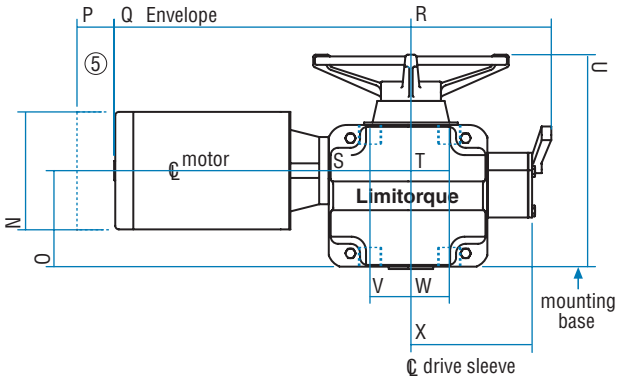

Side View

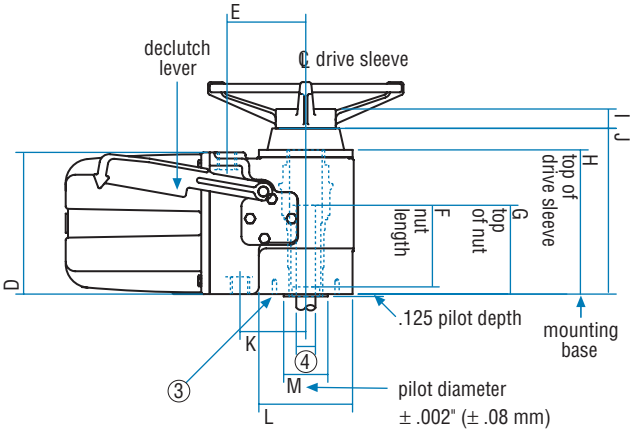

Inches

	A	B	C	D	E	F	G	H	I	J	K	L	M	N	O	P	Q	R	S	T	U	V	W	X
w/ 2-Train GLS	1.2	8.3	12.5	7.4	4.1	4.3	5.0	7.9	1.0	8.6	3.4	4.8	2.3	6.1	5.0	2.0	15.5	7.5	2.1	2.0	10.9	3.2	2.8	6.2
w/ 4-Train GLS	1.2	8.3	15.5	7.4	4.1	4.3	5.0	7.9	1.0	8.6	3.4	4.8	2.3	6.1	5.0	2.0	15.5	7.5	2.1	2.0	10.9	3.2	2.8	6.2

Millimeters

	A	B	C	D	E	F	G	H	I	J	K	L	M	N	O	P	Q	R	S	T	U	V	W	X
w/ 2-Train GLS	31	211	318	188	104	109	127	201	25	218	86	122	58	155	127	51	394	191	53	51	277	81	71	158
w/ 4-Train GLS	31	211	294	188	104	109	127	201	25	218	86	122	58	155	127	51	394	191	53	51	277	81	71	158

The actuator is designed for clockwise to close (left hand thread). If other rotation is required, it must be specifically requested. See certification sheet if opposite rotation is required.

Note 1: Assembly is supplied with standard 10" (254 mm) diameter handwheel. Non-standard handwheel is noted on certification sheet
Note 2: Space for limit switch cover removal; 2-Train, 7.5" (190 mm); 4-Train, 11.0" (279 mm).
Note 3: 5⁄16"-18" x .63" deep; 3.25" between centers; 4 holes straddle centerline.
Note 4: Maximum stem diameters are on page 12.
Note 5: Space for motor removal.

SMB-00 Standard Actuator with Side Mounted Handwheel

Top View

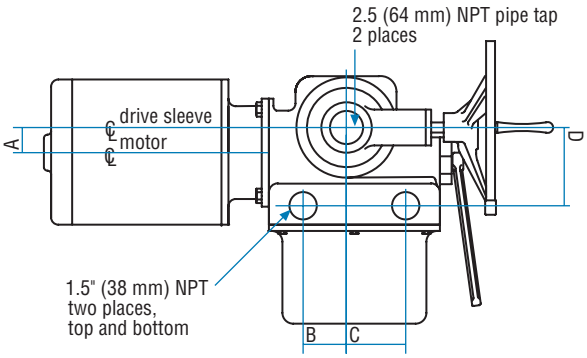

Front View

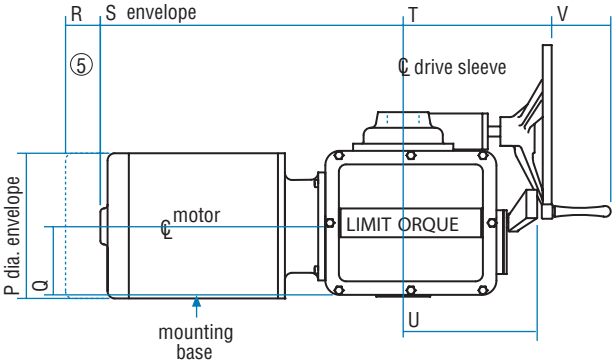

Side View

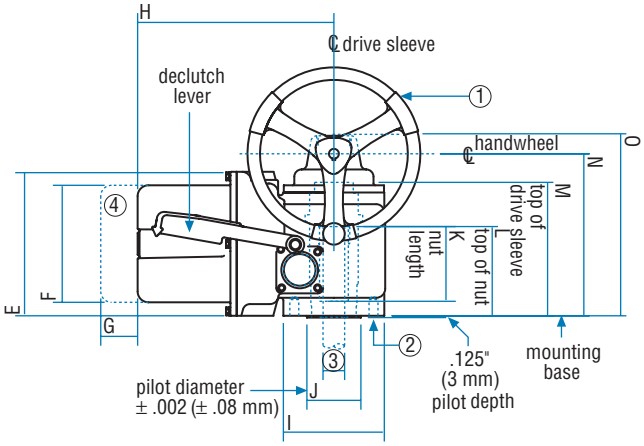

Inches

A	B	C	D	E	F	G	H	I	J	K	L	M	N	O	P	Q	R	S	T	U	V
1.8	3.0	4.1	5.4	10.0	8.1	7.0	13.6	7.0	3.8	5.2	6.2	9.3	10.3	11.7	10.5	4.9	2.0	21.0	9.9	9.8	4.0

Millimeters

A	B	C	D	E	F	G	H	I	J	K	L	M	N	O	P	Q	R	S	T	U	V
46	76	104	137	254	206	178	345	178	97	132	158	236	262	297	267	125	51	533	252	249	102

The actuator is designed for clockwise to close (left hand thread). If other rotation is required, it must be specifically requested. See certification sheet if opposite rotation is required.

Note 1: Assembly is supplied with standard 10" (254 mm) diameter handwheel. Non-standard handwheel is noted on certification sheet. Handwheel rotation clockwise to clockwise drive sleeve output looking down on top of actuator.
Note 2: ⅝"–11 x 1.13" deep; 5.50" between centers; 4 holes straddle centerline.
Note 3: Maximum stem diameters are on page 12.
Note 4: Space for limit switch cover removal.
Note 5: Space for motor removal.

SMB-0 through 3 Standard Actuator

Top View

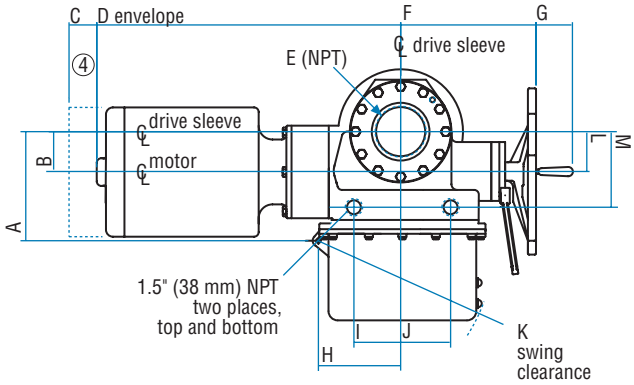

Front View

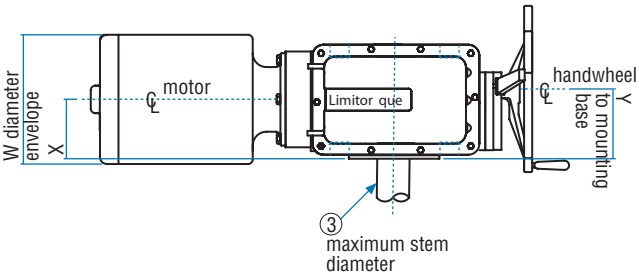

Side View

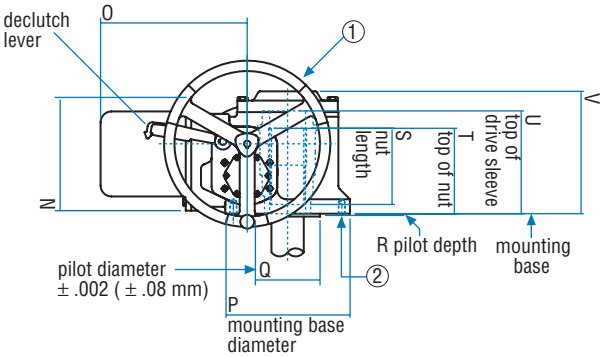

Inches

	A	B	C	D	E	F	G	H	I	J	K	L	M	N	O	P	Q	R	S	T	U	V	W	X	Y
SMB-0	8.8	3.0	4.0	24.0	3.0	13.1	4.0	6.8	4.3	5.7	15.5	3.0	6.3	10.1	15.9	8.3	5.0	0.2	6.1	7.1	8.9	10.1	10.5	5.7	6.4
SMB-1	9.8	3.4	4.0	28.3	3.5	13.1	4.0	7.4	4.9	4.9	15.5	3.6	7.1	10.0	16.8	11.4	6.0	0.2	7.0	8.0	9.9	11.1	12.0	5.9	6.6
SMB-2	10.9	4.4	4.0	32.9	5.0	13.1	4.0	7.8	5.1	5.5	15.5	4.4	78.2	10.1	17.9	13.5	7.0	0.2	8.3	9.3	11.1	13.0	14.0	6.6	7.9
SMB-3	13.9	5.8	4.0	39.5	6.0	17.8	4.0	12.1	9.0	4.0	23.1	6.0	11.3	12.1	20.4	16.0	8.5	0.2	9.4	10.4	12.4	14.2	16.0	8.1	9.3

Millimeters

	A	B	C	D	E	F	G	H	I	J	K	L	M	N	O	P	Q	R	S	T	U	V	W	X	Y
SMB-0	224	76	102	607	76	333	102	173	109	145	394	76	160	257	404	211	127	5	155	180	226	257	267	145	163
SMB-1	249	86	102	719	152	333	102	188	124	124	394	91	180	254	427	290	152	5	179	203	251	282	305	150	168
SMB-2	277	112	102	836	127	333	102	198	130	140	394	112	208	257	455	343	179	5	210	235	283	330	358	168	193
SMB-3	353	147	102	1003	152	452	102	307	229	102	587	152	287	307	518	406	216	5	238	264	315	361	406	206	236

The actuator is designed for clockwise to close (left hand thread). If other rotation is required, it must be specifically requested. See certification sheet if opposite rotation is required.

Note 1: Standard 12" (305mm) diameter handwheel. See certification sheet if non-standard is supplied.

Note 2: For SMB-0: ¾" – 10" x 1.00" deep; 6.50" between centers; 4 holes straddle centerline.
For SMB-1: ⅝" – 11" x 1.00" deep; 10.00" between centers; 8 holes straddle centerline.
For SMB-2: ¾" – 10" x 1.13" deep; 11.75" between centers; 8 holes straddle centerline.
For SMB-3: ⅞" – 9" x 1.75" deep; 14.00" between centers; 8 holes straddle centerline.

Note 3: Maximum stem diameters are on page 12.

Note 4: Space for motor removal.

SMB-4 Standard Actuator

Top View

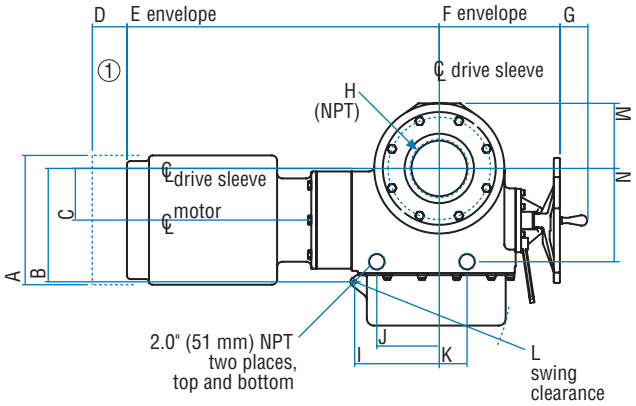

Front View

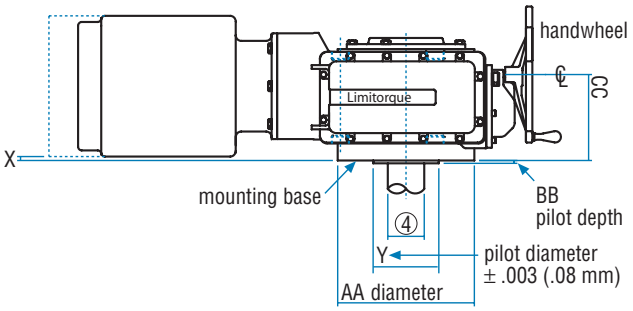

Side View

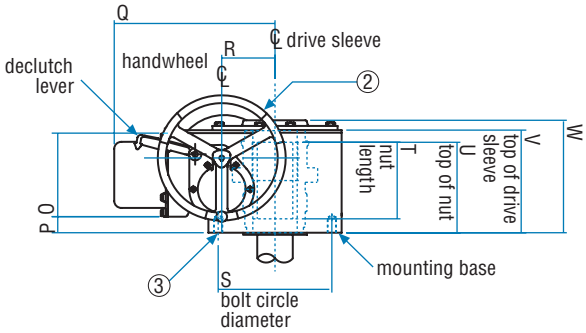

Inches

	A	B	C	D	E	F	G	H	I	J	K	L	M	N	O	P	Q	R	S	T	U	V	W	X
SMB-4	14.9	13.1	16.0	4.0	45.0	18.5	4.0	8.0	12.0	9.0	4.0	23.0	9.4	13.4	12.1	2.3	22.8	7.5	16.0	11.0	13.0	15.5	17.6	0.6

	Y	AA	BB	CC
SMB-4	9.0	18.8	0.4	10.8

Millimeters

	A	B	C	D	E	F	G	H	I	J	K	L	M	N	O	P	Q	R	S	T	U	V	W	X
SMB-4	379	333	152	102	1143	470	102	203	305	229	102	584	239	340	307	58	579	191	406	279	330	394	447	15

	Y	AA	BB	CC
SMB-4	229	478	10	274

The actuator is designed for clockwise to close (left hand thread). If other rotation is required, it must be specifically requested. See certification sheet if opposite rotation is required.

Note 1: Space for motor removal.
Note 2: Standard handwheel 24" (607 mm); non-standard handwheel will be shown on certification sheet. Handwheel rotation clockwise to clockwise drive sleeve output looking down on top of actuator.
Note 3: For SMB-4: 1¼" – 7 UNC tap x 2.0" deep; 16.00" between centers; 8 holes straddle centerline.
Note 4: Maximum stem diameters are on page 12.

SMB-5 and 5T Standard Actuators

Top View

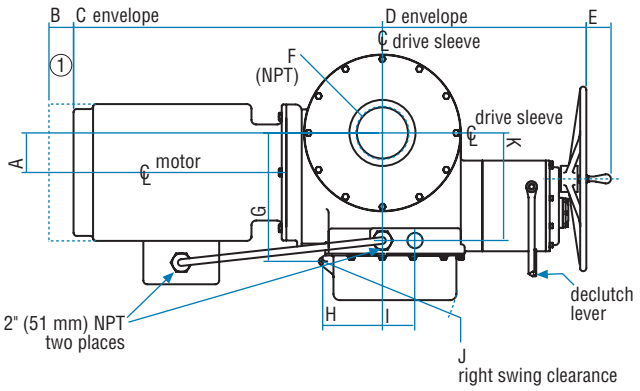

Side View

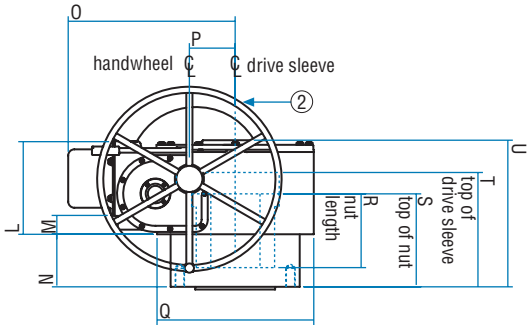

Front View

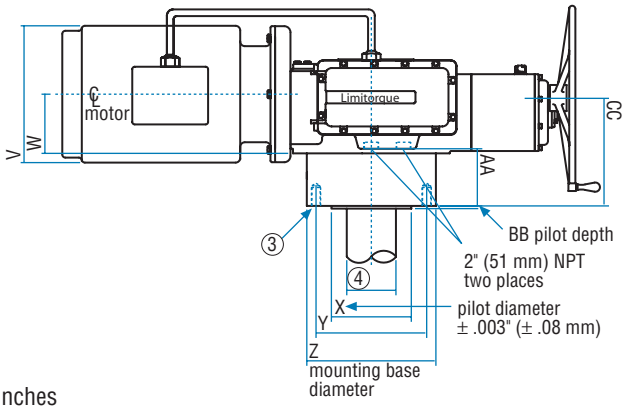

Note:
- The SMB-5T is a torque-only actuator. The thrust base shown here is not provided in the SMB-5T design.
- The base of the SMB-5T has an 18" female pilot diameter.

Inches

	A	B	C	D	E	F	G	H	I	J	K	L	M	N	O	P	Q	R	S	T	U	V	W
SMB-5	5.2	5.0	50.3	35.5	4.0	8.0	20.8	9.2	5.3	23.3	17.0	15.2	3.1	8.5	27.4	7.5	25.5	12.0	15.1	18.6	23.9	20.3	9.6
SMB-5T	5.2	5.0	50.3	35.5	4.0	8.0	20.8	9.2	5.3	23.3	17.5	15.2	3.1	N/A	27.4	7.5	25.5	8.8	N/A	9.0	14.5	20.3	9.6

	X	Y	Z	AA	BB	CC
SMB-5	13.0	18.0	21.0	9.3	0.4	17.5
SMB-5T	18.0	23.5	25.5	0.8	N/A	N/A

Millimeters

	A	B	C	D	E	F	G	H	I	J	K	L	M	N	O	P	Q	R	S	T	U	V	W
SMB-5	132	127	1278	902	102	203	528	234	135	592	432	386	79	216	696	191	648	305	384	472	607	516	244
SMB-5T	132	127	1278	902	102	203	528	234	135	592	432	386	79	N/A	696	191	648	305	N/A	229	368	516	244

	X	Y	Z	AA	BB	CC
SMB-5	330	457	533	236	10	445
SMB-5T	457	597	648	20	N/A	N/A

The actuator is designed for clockwise to close (left hand thread). If other rotation is required, it must be specifically requested. See certification sheet if opposite rotation is required.

Note 1: Space for motor removal.

Note 2: Standard handwheel 30" (762 mm); non-standard handwheel will be shown on certification sheet. Handwheel rotation clockwise to clockwise drive sleeve output looking down on top of actuator.

Note 3: For SMB-5: 1½" – 6 UNC tap x 3.00" deep; 18.00" between centers; 12 holes straddle centerline.
For SMB-5T: 1" – 8 UNC tap x 2.00" deep; 23.50" between centers; 16 holes straddle centerline.

Note 4: Maximum stem diameters are on page 12.

SMB-5XT Standard Actuator

Top View

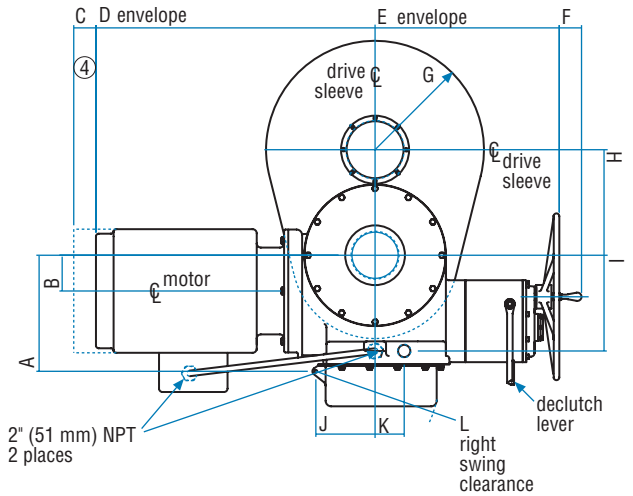

Front View

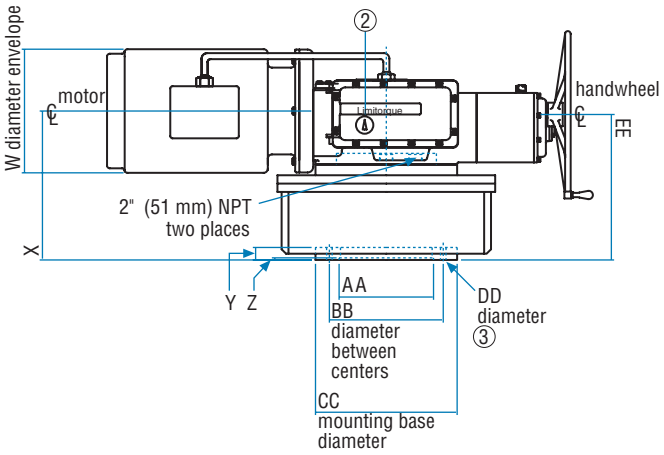

Side View

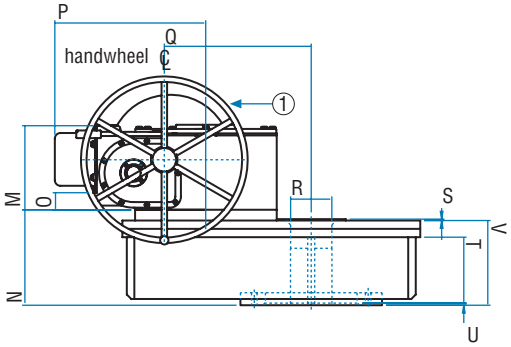

Inches

	A	B	C	D	E	F	G	H	I	J	K	L	M	N	O	P	Q	R	S	T	U	V	W
SMB-5XT	20.6	5.2	5.0	50.3	35.5	4.0	19.6	19.0	17.0	10.1	5.3	23.3	15.2	17.2	3.1	27.4	19.0	7.5	0.3	12.0	0.3	15.3	20.3

	X	Y	Z	AA	BB	CC	DD	EE
	26.6	2.3	0.4	17.0	20.5	25.5	1.1	26.0

Millimeters

	A	B	C	D	E	F	G	H	I	J	K	L	M	N	O	P	Q	R	S	T	U	V	W
SMB-5XT	523	132	127	1278	902	102	498	483	432	257	135	592	386	437	79	696	483	191	8	305	8	389	516

	X	Y	Z	AA	BB	CC	DD	EE
	676	58	10	432	521	648	28	660

The actuator is designed for clockwise to close (left hand thread). If other rotation is required, it must be specifically requested. See certification sheet if opposite rotation is required.

Note 1: Standard handwheel 30" (762 mm); non-standard handwheel will be shown on certification sheet. Handwheel rotation clockwise to clockwise drive sleeve output looking down on top of actuator.

Note 2: Position indicator. See certification sheet if supplied.

Note 3: 1 1/16" Diameter through holes; 20.50" between centers; 16 holes straddle centerline.

Note 4: Space for motor removal.

SB-00 Standard Actuator

Top View

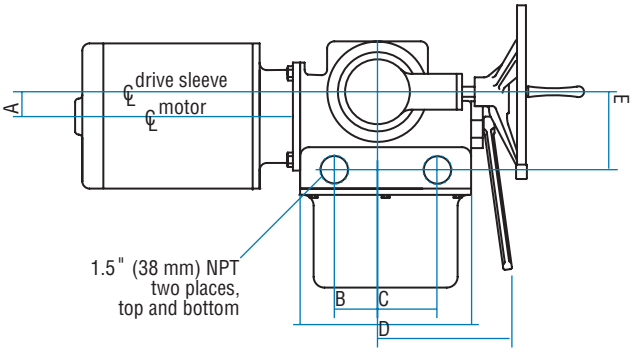

For SBD, double-compensating actuator applications, please contact the factory in Lynchburg, VA.

Front View

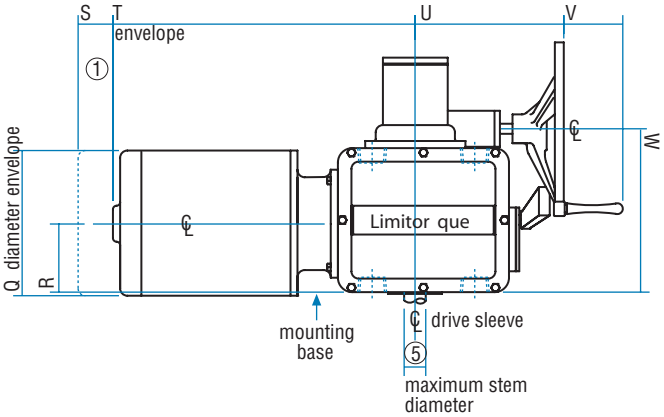

Side View

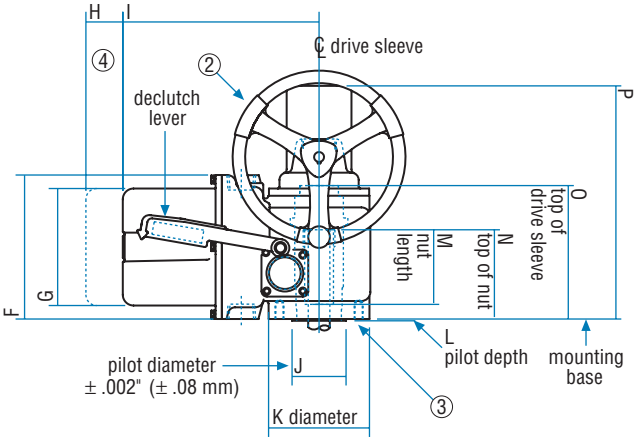

Inches

A	B	C	D	E	F	G	H	I	J	K	L	M	N	O	P	Q	R	S	T	U	V	W
1.8	3.0	4.1	9.8	5.4	10.0	8.1	7.0	13.6	3.8	7.0	0.1	5.2	6.2	9.3	16.2	10.5	4.9	2.0	21.0	9.9	4.0	10.3

Millimeters

A	B	C	D	E	F	G	H	I	J	K	L	M	N	O	P	Q	R	S	T	U	V	W
46	76	104	249	137	254	206	178	345	97	178	3	132	158	236	412	267	125	51	533	252	102	262

The actuator is designed for clockwise to close (left hand thread). If other rotation is required, it must be specifically requested. See certification sheet.

Note 1: Space for motor removal.
Note 2: Standard 12" (305 mm) diameter handwheel. See certification sheet if non-standard is supplied.
Note 3: ⅝" – 11 UNC tap x 1.13" deep; 4 holes straddle centerline on 5.5" diameter between centers.
Note 4: Space for limit switch cover removal.
Note 5: Maximum stem diameters are on page 12.

SB-0 through 4 Standard Actuators

Front View

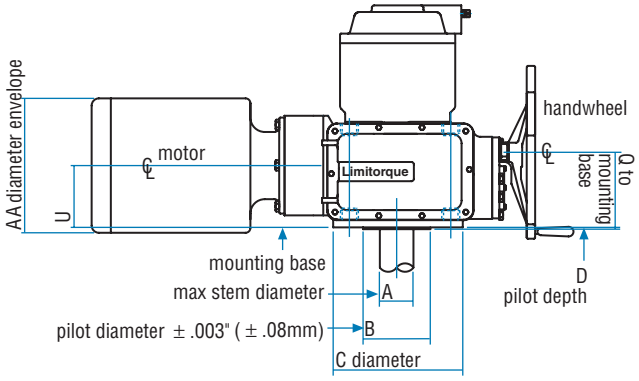

Side View

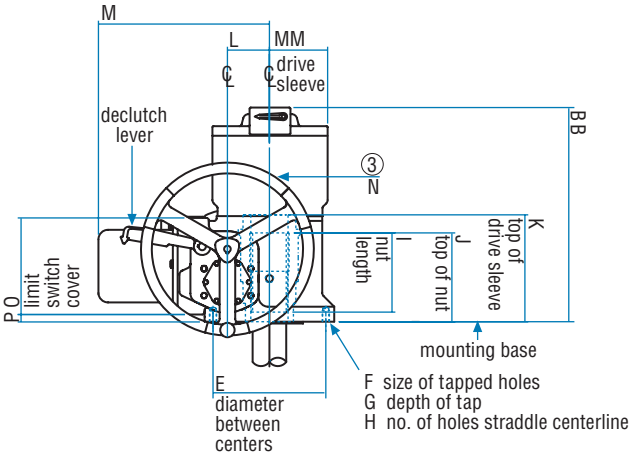

Top View

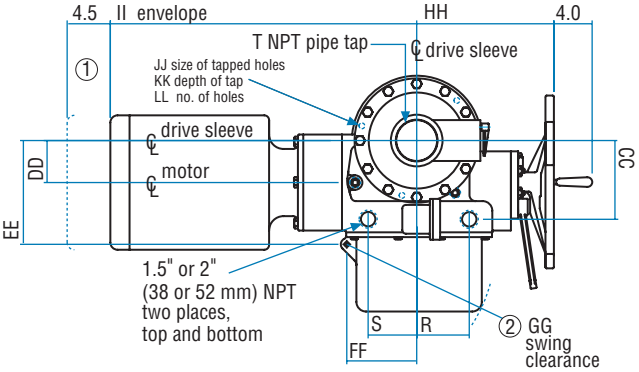

The actuator is designed for clockwise to close (left hand thread). If other rotation is required, it must be specifically requested. See certification sheet.

Note 1: Space for motor removal: 4.5".

Note 2: Weatherproof limit switch covers are not hinged.

Note 3: Handwheel rotation clockwise input to clockwise drive sleeve output, looking down on top of actuator.

Inches

	A(SB)	A(SBD)	B	C	D	E	F	G	H	I	J	K	L	M	N	O	P	Q	R	S	T	U
SB-0	2.4	2.3	5.0	8.3	0.2	6.5	0.75-10	1.0	4.0	6.1	7.1	8.9	3.0	15.8	12.0	10.1	0.1	6.4	5.7	4.3	3.0	5.7
SB-1	2.6	2.5	6.0	11.4	0.2	10.0	0.625-11	1.0	8.0	7.0	8.0	9.9	3.6	16.8	12.0	10.1	0.1	6.6	4.9	4.9	3.0	5.9
SB-2	3.5	3.5	7.0	13.5	0.2	11.8	0.75-10	1.1	8.0	8.3	9.3	11.1	4.4	17.9	18.0	10.8	0.8	7.6	5.5	5.1	4.0	6.6
SB-3	4.0	3.5	8.5	16.0	0.2	14.0	0.875-9	1.8	8.0	9.4	10.4	12.4	6.0	20.4	24.0	12.9	0.8	9.3	4.0	9.0	5.0	8.1
SB-4	5.0	5.0	9.0	18.8	0.4	16.0	1.25-7	2.0	8.0	11.0	13.0	15.5	7.5	22.8	24.0	12.1	2.3	10.8	4.0	9.0	6.0	9.9

	AA	BB(SB)	BB(SBD)	CC	DD	EE	FF	GG	HH	II	JJ	KK	LL	MM
SB-0	10.5	14.8	22.1	6.3	3.0	8.8	6.8	15.5	13.1	24.0	0.5-13	0.8	2.0	4.1
SB-1	12.0	21.4	24.3	7.1	3.4	9.8	7.4	15.5	12.6	28.3	0.625-11	0.8	2.0	4.7
SB-2	14.0	23.4	26.4	8.2	4.4	10.9	7.3	15.5	14.6	32.9	0.625-11	1.0	3.0	5.6
SB-3	16.0	27.1	28.1	11.3	5.8	13.9	12.1	23.1	17.8	39.5	0.875-9	1.3	3.0	8.0
SB-4	18.6	28.0	42.5	13.4	7.1	16.3	12.1	23.0	18.5	45.0	0.875-9	2.0	3.0	9.4

Millimeters

	A(SB)	A(SBD)	B	C	D	E	F	G	H	I	J	K	L	M	N	O	P	Q	R	S	T	U
SB-0	61	57	127	211	5	165	N/A	25	102	154	179	227	76	401	305	257	2	163	145	109	76	145
SB-1	67	63	152	290	5	254	N/A	25	203	178	203	251	91	427	305	257	2	168	124	124	76	150
SB-2	89	89	178	343	5	299	N/A	29	203	210	235	283	112	455	457	274	20	193	140	130	102	168
SB-3	102	89	216	406	5	356	N/A	45	203	238	264	315	152	518	610	328	20	236	102	229	127	206
SB-4	127	127	229	478	10	406	N/A	51	203	279	330	394	191	579	610	307	58	274	102	229	152	251

	AA	BB(SB)	BB(SBD)	CC	DD	EE	FF	GG	HH	II	JJ	KK	LL	MM
SB-0	267	376	561	160	76	224	173	394	333	610	13-13	19	51	104
SB-1	305	544	617	180	86	249	188	394	320	719	16-11	19	51	119
SB-2	356	594	671	208	116	277	185	394	371	836	16-11	25	76	142
SB-3	406	688	714	287	147	253	307	587	452	1003	22-9	32	76	203
SB-4	472	711	108	340	180	414	305	584	470	1143	22-9	51	76	239

Limitorque Actuation Systems
5114 Woodall Road,
P.O. Box 11318
Lynchburg, VA 24506-1318
Phone (434) 528-4400
Facsimile (434) 845-9736
http://www.limitorque.com

Limitorque
Abex Road
Newbury
Berkshire, RG14 5EY
England
Phone 44-1-635-46999
Facsimile 44-1-635-36034

Limitorque Nippon Gear Co., Ltd.
Asahi-Seimei Bldg. 4th Floor
1-11-11 Kita-Saiwai, Nishi-Ku
Yokohama-Shi, (220-0004)
Japan
Phone 81-45-326-2065
Facsimile 81-45-320-5962

Limitorque India, Ltd.
15/4, Mile Stone
Mathura Road
Faridabad 121002
India
Phone 91-129-2276586
Facsimile 91-129-2277135

Flowserve Australia Pty Ltd.
14 Dalmore Drive
Scoresby, Victoria 3179
Australia
Phone 613-9729-2633
Facsimile 613-9729-2644

Limitorque Asia, Pte., Ltd.
12, Tuas Avenue 20
Singapore 638824
Phone 65-6868-4628
Facsimile 65-6862-4940

Flowserve Corporation has established industry leadership in the design and manufacture of its products. When properly selected, this Flowserve product is designed to perform its intended function safely during its useful life. However, the purchaser or user of Flowserve products should be aware that Flowserve products might be used in numerous applications under a wide variety of industrial service conditions. Although Flowserve can (and often does) provide general guidelines, it cannot provide specific data and warnings for all possible applications. The purchaser/user must therefore assume the ultimate responsibility for the proper sizing and selection, installation, operation, and maintenance of Flowserve products. The purchaser/user should read and understand the Installation and Maintenance (I & M) instructions included with the product, and train its employees and contractors in the safe use of Flowserve products in connection with the specific application.

While the information and specifications contained in this literature are believed to be accurate, they are supplied for informative purposes only and should not be considered certified or as a guarantee of satisfactory results by reliance thereon. Nothing contained herein is to be construed as a warranty or guarantee, express or implied, regarding any matter with respect to this product. Because Flowserve is continually improving and upgrading its product design, the specifications, dimensions and information contained herein are subject to change without notice. Should any question arise concerning these provisions, the purchaser/user should contact Flowserve Corporation at any one of its worldwide operations or offices.

For more information about Flowserve Corporation, visit www.flowserve.com or call USA 1 800 225 6989.

FLOWSERVE CORPORATION
FLOW CONTROL DIVISION
Limitorque Actuation Systems
5114 Woodall Road
P.O. Box 11318
Lynchburg, VA 24506-1318
Phone: 434 528 4400
Facsimile: 434 845 9736
www.limitorque.com

NQA ISO9001 REGISTERED COMPANY
NATIONAL ACCREDITATION OF CERTIFICATION BODIES

©2004 Flowserve Corporation, Irving, Texas, USA. Flowserve and Limitorque are registered trademarks of Flowserve Corporation

FCD LMABR1400-00 Printed in USA.
(Replaces 140-10000)